LUFTKONDITIONERING / AIR CONDITIONING / LUFTKONDISJONERING

MSA-A-EASY25-I/U
MOX-A-EASY25-O/U
MSA-A-EASY35-I/U
MOX-A-EASY35-O/U

SE **Bruksanvisning**.....sid 3
GB **User manual**.....sid 6
NO **Bruksanvisning**.....sid 9

Läs bruksanvisningen noga innan du använder produkten. Spara bruksanvisningen för framtida bruk.
Before using this product, please read the user manual carefully. Save the user manual for future reference.
Les bruksanvisningen nøye før du tar i bruk produktet. Ta vare på bruksanvisningen for fremtidig bruk.

SÄKERHETSFÖRESKRIFTER 3-4
SPECIFIKATIONER 4
FÖRKLARING INNERDELEN 5
INBYGGDA FUNKTIONER 6
GARANTERADE TEMPERATUROMRÅDEN 6
NÖDDRIFTSLÄGE 6
FJÄRRKONTROLLEN 7
SÄTTA I NYA BATTERIER 7
TEKNISKA FAKTA 7
JUSTERA LUFTFLÖDETS RIKTNING 8
TIPS FÖR OPTIMAL PRESTANDA 9
SKÖTSEL OCH UNDERHÅLL 9
RENGÖRING AV INOMHUSDELEN 10
RENGÖRING AV INOMHUSDELENS VÄRMEVÄXLARE/ LAMELLPAKET 10
RENGÖRING AV UTOMHUSDELEN 10
NORMALA FUNKTIONER/SYMPTOM FRÅN LUFTKONDITIONERINGEN 11
ENHETEN FUNGERAR INTE SOM DEN SKA 12
KASSERING AV ENHET 12

SÄKERHETSFÖRESKRIFTER

Eftersom denna produkt innehåller delar som kan förorsaka skador vid felaktig hantering, skall du läsa”Säkerhetsföreskrifter” innan du tar produkten i bruk. Följ föreskrifterna noga.

Varningsmärken och deras betydelse:

VARNING: Felaktig hantering kan förorsaka allvarlig fara såsom dödsfall, allvarlig kroppsskada etc.

FÖRSIKTIGHET: Felaktig hantering kan, beroende på omständligheterna, förorsaka allvarlig skada.

Symbolerna som används i denna handbok och deras betydelse:

Absolut förbjudet

Följ instruktionerna noga

VARNING!

- Använd inte förlängningssladd eller anslut enheten till ett vägguttag. Detta kan orsaka överhettning, brand eller elektriska stötar.
- Utsätt inte kroppen för kallt, direkt luftdrag under längre tid.
- Stick inte in fingrar, pinnar eller andra föremål i enheten
- Användaren får inte installera, flytta enheten, ändra eller reparera den. Kontakta alltid närmaste serviceställe.
- Dra aldrig i nätsladden.
- Placera inte enheten i ett våtutrymme såsom badrum eller tvättstuga.

- Vid onormala omständigheter (te.x. röklukt) stäng omedelbart av enheten och bryt strömmen. Kontakta Midea.
- Bryt alltid strömmen till enheten innan du börjar rengöra enheten.
- Enheten måste installeras av en behörig servicefirma.
- Vid service kontakta alltid en behörig servicefirma.
- Barn bör hållas under uppsyn så de inte leker med enheten.

FÖRSIKTIGHET!

- Vidrör aldrig någon el- anslutning med våta eller fuktiga händer. Det kan orsaka en elektrisk stöt.
- Använd aldrig enheten till annat än vad den är tänkt för.
- Trampa inte på inomhusenheten.
- Ställ inte något föremål ovanpå inomhusenheten.
- Utsätt aldrig människor,husdjur eller krukväxter för kallt, direkt luftdrag.
- Använd inte insektsmedel eller antändbara gaser på enheten, detta kan förorsaka brand eller leda till att enheten deformeras.
- Placera aldrig brinnande föremål i närheten av enheten.
- Låt aldrig enheten stå på ett stativ som är skadat eller rostigt.
- Installera aldrig enheten i närheten av lättantändliga gaser, det kan orsaka en brand eller explosion.

- Bryt strömmen till enheten om den inte kommer att användas under en längre period.
- Stäng av enheten och bryt strömmen till enheten vid storm/åska etc. De elektriska delarna kan annars ta skada.
- Var noga med att dräneringsslangen är korrekt ansluten annars läcker vatten ut med vattenskada som följd.
- Var noga med att kondensvattnet kan rinna ut obehindrat, annars kan vattenskada uppstå.
- El anslutningen till enheten skall vara jordad.
- För din egen säkerhet rekommenderar vi att sätta in en jordfelsbrytare

SPECIFIKATIONER

Modell	Inomhusenhet modellbeteckning	MSA-A-EASY25-I/U
	Utomhusenhet modellbeteckning	MOX-A-EASY25-O/U
Dimensioner inomhusdel	BxDxH (mm)	795x225x295
Dimensioner utomhusdel	BxDxH (mm)	805x330x554
Köldmedietyp		R32
Strömförsörjning		220-240V,1Ph,50Hz

Modell	Inomhusenhet modellbeteckning	MSA-A-EASY35-I/U
	Utomhusenhet modellbeteckning	MOX-A-EASY35-O/U
Dimensioner inomhusdel	BxDxH (mm)	795x225x295
Dimensioner utomhusdel	BxDxH (mm)	805x330x554
Köldmedietyp		R32
Strömförsörjning		220-240V,1Ph,50Hz

(*:or i modellbeteckningen = olika varanter/versioner av modell)

FÖRKLARING INNERDEL

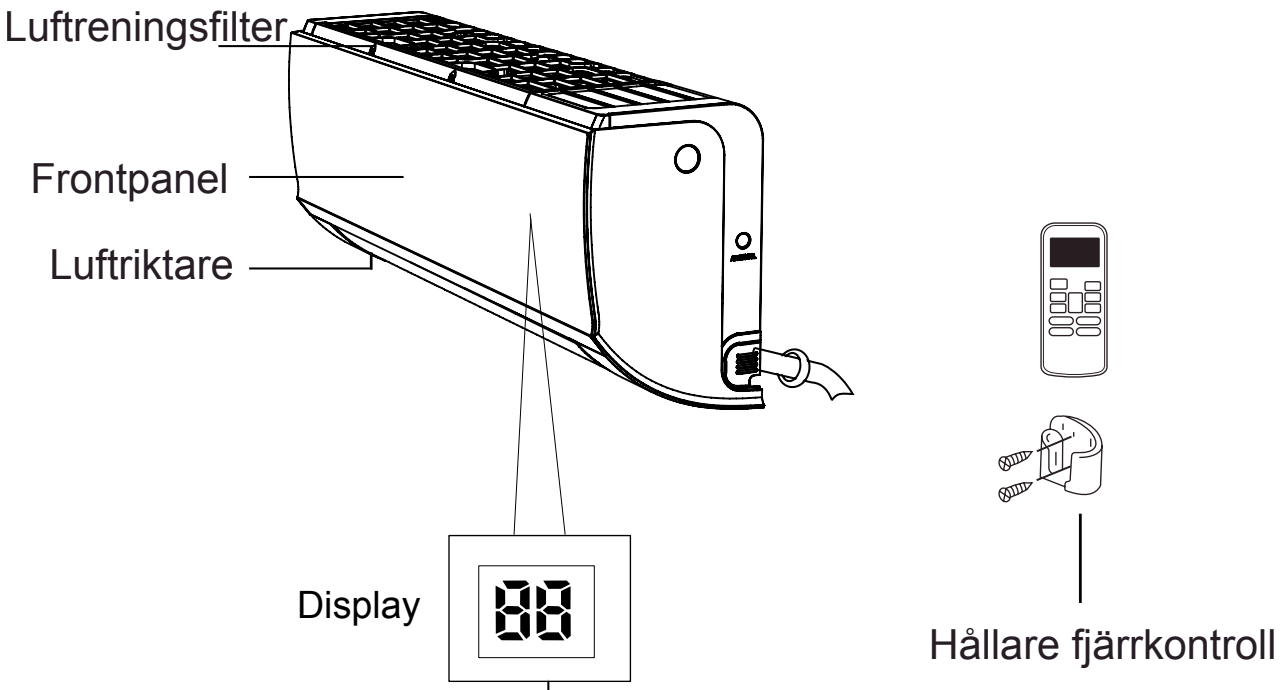

“ ON ” Visas i 3 sekunder när:
- TIMER ON, SWING eller TURBO aktiveras

“ OF ” Visas i 3 sekunder när
- TIMER OFF, SWING eller TURBO avaktiveras

“ cF ” Visas när enhetens kallrasskydd är aktiverat dvs. tillfälligt låg utblåstemperatur från innerdelen.

“ dF ” Visas när enheten avfrostar

Felkoder kan också visas i displayen, se avsnittet felsökning i denna bruksanvisning.

OBS! Alla bilder i denna manual är endast till för att förklara, utseendet på inomhusenheterna kan variera.

INBYGGDA FUNKTIONER

Detektor vid läckage

- Displayen kommer att visa ”EC” när utomshusdelen upptäcker ett läckage på köldmediekretsen.

Minnesfunktion för den horisontella luftriktaren

- Enheten minns rörelsen och vinkeln för det horisontella luftintaget. Om maxvinkeln överskrids kommer den återgå den till grundinställningen.

TURBO

- Turbo-funktionen gör att enheten når inställd temperatur på kortast möjliga tid. Om du är i Cooling-läget och trycker TURBO kommer enheten att blåsa kallluft med hög fläkthastighet. Om du är i HEAT läge kommer den att blåsa värme.

GARANTERADE TEMPERATUROMRÅDEN

Temperatur/Läge	Kyla (COOL)	Värme (HEAT)	Avfuktning (DRY)
Rumstemperatur	17°C ~ 32°C	17°C ~ 30°C	10°C~32°C
Utomhustemperatur	-15°C ~ 50°C	5°C ~ 30°C *	0°C ~ 50°C

OBS!
Enheten presterar optimalt i dessa temperaturer. Om enheten används i andra temperaturförhållanden kan det påverka prestandan/driftsäkerheten.

* Då detta är en luftkonditionering optimerad för kyldrift är enheten begränsad att avge värme ner till utomhustemperatur på 5°C. Enheten kommer då att stänga av för att sedan starta igen vid 8°C igen. Detta gäller i värmedrift. Koden ”P3” i innerdelens display

NÖDDRIFTSLÄGE

Om enhetens fjärrkontroll av någon anledning inte fungerar kan enheten köras tillfälligt i ett s.k nöddriftsläge, knappen finns på innerdelens högra sida enligt bild.

- Tryck på knappen 1 gång för att starta enheten i nöddrift AUTO.
- Tryck på knappen 1 gång till för att starta enheten i nöddrift KYLA
- Tryck på knappen 1 gång till för att stoppa enheten

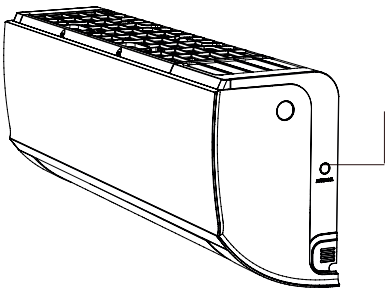

FJÄRRKONTROLLEN

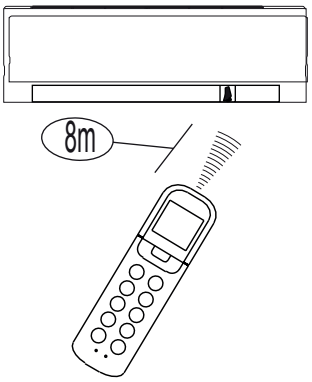

- Använd fjärrkontrollen inom en radie av 8 meter från inomhusenheten
- Rikta fjärrkontrollen mot innerdelen tills du hör ett pip som bekräftar mottagaren.

OBS!

- Se till att gardiner, dörrar och annat inte blockerar signalerna från fjärrkontrollen till inomhusdelen.
- Fjärrkontrollen får inte utsättas för väta/vätska.
- Fjärrkontrollen får inte utsättas för hög värme eller direkt solljus.
- Den infraröda mottagaren på inomhusdelen får inte utsättas för direkt solljus då den kan påverkas att inte fungera korrekt.
- Om andra elektriska apparater reagerar med fjärrkontrollen, flytta apparaterna.

SÄTTA I NYA BATTERIER

Fjärrkontrollen har två batterier av typ AAA placerade under skalet på fjärrkontrollens baksida

1. Ta bort skalet genom att trycka och pressa nedåt.
2. Ta bort gamla batterier och sätt i de nya batterierna, se till att (+)och (-) hamnar rätt.
3. Sätt tillbaka skalet

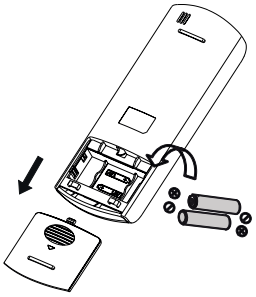

TEKNISKA FAKTA FJÄRRKONTROLL

Modell på fjärrkontroll	RG10A1(B2S)/BGEF
Volt/Batterier	3.0V (2 x AAA -batterier)
Radie för mottagande av signal	8 meter

JUSTERA LUFTFLÖDETS RIKTNING

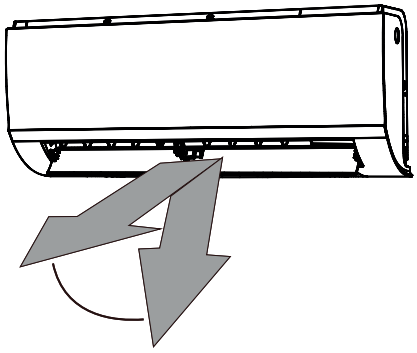

LUFTRIKTNINGSPJÄLL HORISONTELLT

Justera luftlödets riktning med fjärrkontrollen (SWING/DIRECT)

Det horisontella spjället ändrar riktning med 6 grader för varje knapptryckning, eller kör automatiskt upp och ned.

VIKTIGT!
Rör inte det horisontella luftriktningspjället manuellt med händerna då detta kan skada den elektriska motorn.

LUFTRIKTNINGSPJÄLL VERTIKALT

Justera luftlödets riktning manuellt genom att skjuta justeringsspaken i sidled enligt bild nedan.

VIKTIGT!
Stick inte in fingrar i luftintaget. Detta kan orsaka skador

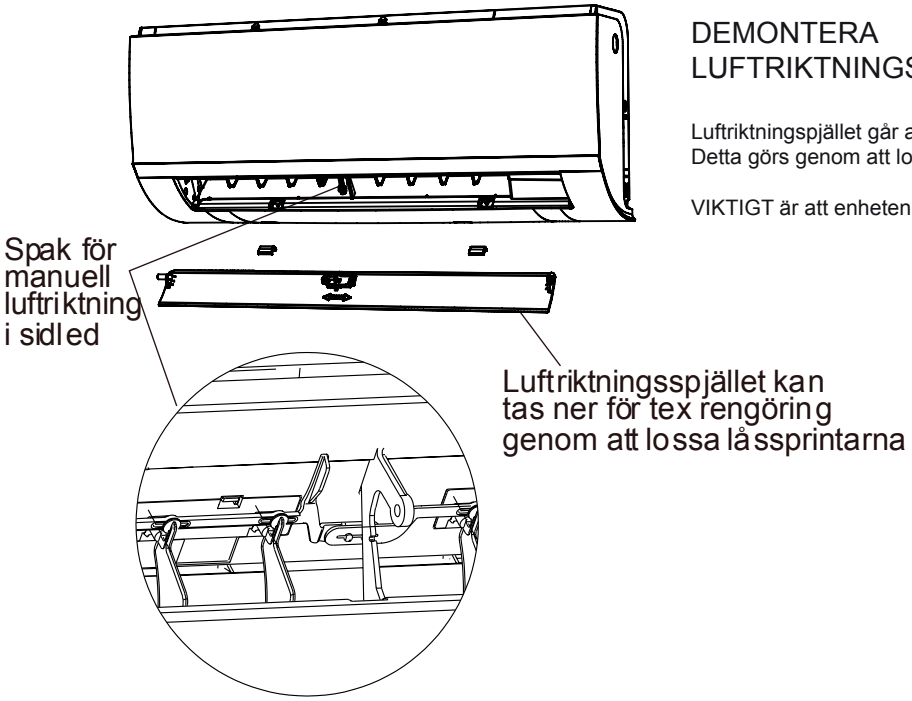

DEMONTERA LUFTRIKTNINGSPJÄLLET

Luftriktningspjället går att demontera för att te.x rengöra utblåset.
Detta görs genom att lossa låssprinten som sitter i mitten på spjällvingen.

VIKTIGT är att enheten skall vara avstängd och strömlös när detta utförs.

VARNING!

- Det är en fördröjning på 10 sekunder innan det horisontella gallret rör sig när du startat enheten.
- Justera inte det horisontella gallret manuellt , det blir osynkroniserat i programmet eller kan skada enheten.
- Se alltid till att luftriktningspjällen är öppna när enheten är i drift.

TIPS FÖR OPTIMAL PRESTANDA

För att få ut absolut bästa prestanda av enheten följ nedanstående punkter.

- Justera luftflödets riktning så att det inte riktas mot människor.
- Justera temperaturen för att nå högsta komfort, överdriv inte.
- Stäng dörrar och fönster i Cool och Heat-läget för bästa resultat.
- Använd TIMER ON på fjärrkontrollen för att välja vilken tid du vill starta enheten.
- Placera inga föremål nära luftintag eller luftutblås, det kan påverka enhetens prestanda elle att den stannar.
- Rengör luftfiltret varannan vecka för att bibehålla bästa prestanda.
- Använd inte enheten med det horisontella luftriktaren stängd.

SKÖTSEL OCH UNDERHÅLL

UNDERHÅLL

Innan rengöring var noga med att alltid stänga av enheten. Rengör med en mjuk, torr trasa. Använd inte rengöringsmedel som innehåller blekmedel eller slipmedel.

OBS! Viktigt att bryta strömmen till enheten innan du rengör inomhusdelen.

FÖRSIKTIGHET

- En lätt fuktad trasa med kallt vatten kan användas om inomhusdelen är mycket smutsig. Torka sedan av med en torr trasa.
- Använd inte en kemiskt behandlad trasa eller dammvippa för att rengöra.
- Använd inte bensin, thinner, putsmedel eller liknande. Detta kan orsaka att plastytan deformeras eller spricker.
- Använd inte vatten varmare än 40°C för att rengöra frontpanelen, det kan orsaka deformering eller missfärgning.
- Rör inte metalldelarna när du tar bort filter, skärskador kan uppstå.
- Använd inte vatten för att rengöra insidan på enheten , kan uppstå elektriska stötar.
- Kolla så att enheten är avstängd och strömmen bruten innan du påbörjar rengöring.
- Tvätta inte luftfilter i vatten som är mer än 40°C. Skaka sedan filtret och låt det torka. Utsätt inte filtret för direkt solljus.

RENGÖRING AV INOMHUSDELEN

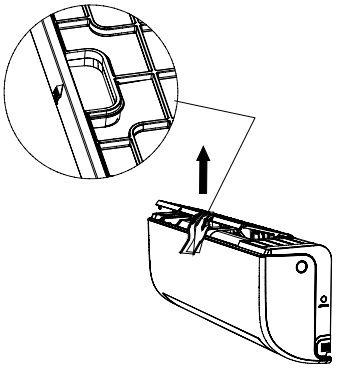

Viktigt! Börja med att stänga av enheten innan regöring

Torka enheten med en mjuk och torr trasa. Om enheten är mycket smutsig, torka av med en i ljummen fuktig trasa. (max 40°C)

RENGÖRA LUFTFILTER
Ett igensatt filter minskar enhetens luftflöde som även påverkar värmen/kylkapaciteten. Rengör filtret varannan vecka.

Ta loss luftfiltret som sitter på inomhusdelens ovansida genom att lyfta upp filtret och sedan dra filtret mot dig. Se bilder t.v

Rengör filtret varannan vecka. Dammsug rent filtret eller skölj med vatten , låt torka ordentligt innan åter-montering i omvänd ordning.

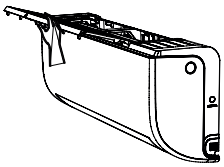

TÄNKA PÅ!
För att effekten på enheten skall bibehållas är det att rekommendera att rengöra inomhusdelens värme-växlare/ lamellpaket som du finner bakom luftfiltren. Detta görs genom att spraya ett rengöringsmedel på värmeväxlaren, mer information om detta finns på www.midea.com

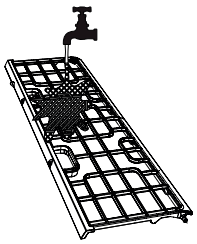

RENGÖRING AV UTOMHUSDELEN

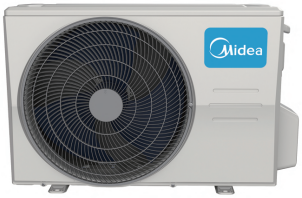

1. Torka av utomhusdelen med lätt fuktig trasa
2. Ta bort löv, grenar från utomhusdelen.
3. Kontrollera att det är rent under utomhusdelen så att vattnet från avfrostningen kan rinna fritt.

OM ENHETEN INTE SKALL ANVÄNDAS UNDER LÄNGRE TID.

1. Rengör inomhusdelen och filtren.
2. Låt fläkten köra en halv dag för att torka ut insidan på inomhusdelen.
3. Stäng av enheten och bryt strömmen.
4. Ta bort batterierna från fjärrkontrollen.

NÄR ENHETEN ANVÄNDS PÅ NYTT, FÖLJ NEDANSTÅENDE PUNKTER:

- Se till att det finns ström till enheten och att ingen elkabel är sönder.
- Se till att luftreningsfiltret sitter i.
- Se till att luftutsläpp / luftintag inte är blockerat.

NORMALA FUNKTIONER/SYMPTOM FRÅN LUFTKONDITIONERINGEN

Följande händelser kan uppstå under drift vilket är helt normalt.

Kompressorskydd

Vid uppstart/strömavbrott dröjer det 3-4 minuter innan kompressorn startar, detta för att skydda kompressorn.

Kallrasskydd

Enheten är gjord för att inte blåsa kall luft i HEAT-läget när inomhusdelens växlare är i nedanstående lägen och inte nått den inställda temperaturen:

A) När värmeläget precis har startat
B) Vid avfrostning

Avfrostning

- Frost kan uppstå på utomhusdelen under värmeprocessen om det är en låg utomhustemperatur och hög luftfuktighet, vilket ger lägre värmeeffekt från enheten.
- När avfrostningen startar kommer enheten att stänga av värmen och börja avfrosta automatiskt.
- Avfrostningscykeln kan variera mellan 4 och 10 minuter beroende på utomhustemperaturen och mängden frost som uppstått på utomhusdelen.
- Inomhusdelens fläkt stängs av när enheten avfrostar
- Tiden mellan avfrostningarna varierar beroende på temperaturer ute/inne samt luftfuktigheten

En vit imma kommer från inomhusdelen.

- En vit imma kan komma från inomhusdelen i en inomhusmiljö med ganska hög luftfuktighet. Denna imma kan uppstå om det är en stor temperaturskillnad mellan luftintaget och luftutsläppet i COOL-läget.
- Imman kan även komma efter fuktigheten som uppstått vid avfrostningen när luftkonditioneringen startar i HEAT-läget efter avfrostningscykeln.

Ljud ifrån enheten

- Du kan höra ett lågt, väsande ljud när kompressorn körs eller har just stannat.
- Du kan också höra ett knäppande ljud te.x. i samband med avfrostning/uppstart. Detta kan bero på att inomhusdelens värmeväxlare expanderar/krymper p.g.a snabba temperaturförändringar vilket kan skapa spänningar i innerdelen.

En speciell lukt kommer från inomhusdelen

- Detta kan orsakas av att inomhusdelen ger ifrån sig lukter som genomsyras från byggmaterial, möbler eller rök

Enheten ändrar till endast fläktläge

- När önskad inomhustemperatur nås på enheten, stannar kompressorn automatiskt och enheten ändrar till fläktläge. Kompressorn startar igen när inomhustemperaturen sjunker/stiger över inställt läge

Värmepumpen ger inte lika mycket värme

- I samband med att utomhustemperaturen sjunker utomhus kommer enheten att tappa i effekt samtidigt som inomhusbehovet blir högre. Justera in din grundvärmekälla (te.x. husets el- radiatorer) så att det systemen kan arbeta ihop med värmepumpen. Skall vara injusterat ca 1-2 grader under den temperatur som är inställd på värmepumpen. Detta för att säkerställa god funktion/avfrostning.

Återstart efter strömavbrott

- När strömmen återkommer efter strömavbrott återstartar enheten automatiskt med alla tidigare inställningar, tack vare minnesfunktionen i enheten.

ENHETEN FUNGERAR INTE SOM DEN SKA!

Om något av följdande fel uppstår, stäng av enheten direkt, bryt strömmen och anslut sedan igen. Om problemet kvarstår vid något av följande fel kontakta Midea.

OPERATION lampan eller annan lampa blinkar
Säkringen eller jordfelsbrytaren slår ifrån
Fjärrkontrollen fungerar inte eller delvis efter batteribyte.
Om du får någon av följande felkoder i displayen. E0,E1,E2,E3... eller P0,P1,P2,P3.... eller F0,F1,F2,F3

Symtom	**Orsak**	**Åtgärd**
Enheten startar inte	Strömavbrott?	Vänta tills strömmen återkommer.
	Har en säkring gått?	Byt säkring
	Har batterierna i fjärrkontrollen tagit slut?	Byt batterier
	Du har ställt in timertiden fel?	Vänta eller avaktivera timerinställningen enligt manualen
Rummet kan inte kylas ner/värmas upp tillräckligt mycket	Är temperaturinställningen korrekt	Kontrollerar inställningarna på fjärrkontrollen, se avsnittet ”Värmepumpen ger inte lika mycket värme” på sidan 18
	Luftfiltret är blockerat	Rengör luftfiltret.
	Dörrar eller fönster är öppna	Stäng dörrar och fönster.
	Luftintag eller luftutblås på inomhus/utomhusdelen är blockerade.	Ta bort ev. hinder och starta om enheten.
Om felet inte har avhjälpts, kontakta Midea. Informera om felet och enhetens modellnummer som finns på inner- och ytterdelens märkskyltar		
OBS! Försök inte att reparera enheten själv		

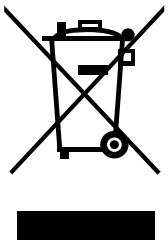

KASSERING AV ENHETEN

- Produkten skall återlämnas på godkänt insamlingsställe när den skall kasseras.
- Batteri från te.x. fjärrkontroll skall lämnas in på godkänt insamlingställe.
- Förbjudet att slänga i vanliga sopor eller ute i naturen då köldmedie kan läcka ut och spridas ner i grundvattnet vilket kan påverka naturen.

SAFETY RULES 14-15
SPECIFICATIONS 15
INDOOR UNIT RAPID GUIDE 16
INTEGRATED FUNCTIONS 17
GUARANTEED TEMPERATURE RANGE 17
EMERGENCY OPERATION MODE 17
THE REMOTE CONTROL 18
- FITTING NEW BATTERIES 18
- TECHNICAL DATA 18
- ADJUSTING AIR FLOW DIRECTION 19

TIPS FOR OPTIMUM PERFORMANCE 20
CARE AND MAINTENANCE 20
- CLEANING THE INDOOR UNIT 21
- CLEANING THE INDOOR UNIT'S HEAT EXCHANGER/FINS 21
- CLEANING THE OUTDOOR UNIT 21

NORMAL HEAT PUMP FUNCTIONS/SYMPTOMS 22
UNIT NOT FUNCTIONING AS IT SHOULD 23
DISPOSING OF UNITS 23

SAFETY RULES

Because this product has parts that can cause damage if used incorrectly, you must read “Safety rules” before using the product. Follow the rules meticulously.

Warning symbols and what they mean:

WARNING! Incorrect use can have serious consequences such as death, serious injury, etc.

CAUTION! Depending on circumstances, incorrect use can cause serious injury.

Other safety symbols used in this manual and their meaning:

Absolutely prohibited

Follow the instructions meticulously

WARNING!

- Do not use an extension lead or connect the unit to a wall outlet. This can lead to overheating, fire or electric shocks.
- Do not expose your body to direct draughts of cold air for any great length of time.
- Do not insert fingers, pins or other objects into the unit.
- The user may not install, move, modify or repair the unit. Always contact the nearest service point.
- Never pull the power lead.
- Do not place the unit in wet areas such as bathrooms or laundry rooms.

- If abnormal circumstance arise (e.g. a smell of smoke), turn off the unit immediately and disconnect it from the power supply. Contact Midea.
- Before you start cleaning the unit, always disconnect it from the power supply.
- The unit must be installed by a qualified service company.
- Always contact a qualified service company for servicing.
- So that they do not play with the units, children should be kept under supervision.

CAUTION!

- Never touch any electrical connection with wet or damp hands. This can result in an electric shock.
- Never use the unit for anything other than its intended purpose.
- Do not stand on the indoor unit.
- Do not place any object on top of the indoor unit.
- Never expose people, pets or pot plants to direct draughts of cold air.
- Never spray/apply insecticides or flammable gases on/to the unit. This can result in fires or deformation of the unit.
- Never place burning objects near the unit.
- Never let the unit stand on a mount that is damaged or rusty.
- Never install the unit near flammable gases. This can lead to a fire or explosion.

- If the unit is not to be used for a long time, disconnect it from the power supply.
- During storms/lightning, etc., turn off the unit and disconnect it from the power supply. Otherwise, there is a risk of damage to the electrical components.
- Check thoroughly that the drain hose is properly connected. If it is not, water may leak and cause damage.
- Check thoroughly that condensation can run out freely. Water damage may otherwise arise.
- The unit's electrical connection must be earthed.
- For your own safety, we recommend that a residual current device is fitted.

SPECIFICATIONS

Model	Indoor unit model designation	MSA-A-EASY25-I/U
	Outdoor unit model designation	MOX-A-EASY25-O/U
Indoor unit dimensions	L x W x H (mm)	795x225x295
Outdoor unit dimensions	L x W x H (mm)	805x330x554
Refrigerant type		R32
POWER SUPPLY		220-240V,1Ph,50Hz

Model	Indoor unit model designation	MSA-A-EASY35-I/U
	Outdoor unit model designation	MOX-A-EASY35-O/U
Indoor unit dimensions	L x W x H (mm)	795x225x295
Outdoor unit dimensions	L x W x H (mm)	805x330x554
Refrigerant type		R32
POWER SUPPLY		220-240V,1Ph,50Hz

(* in a model designation = different variants/versions of a model)

INDOOR UNIT RAPID GUIDE

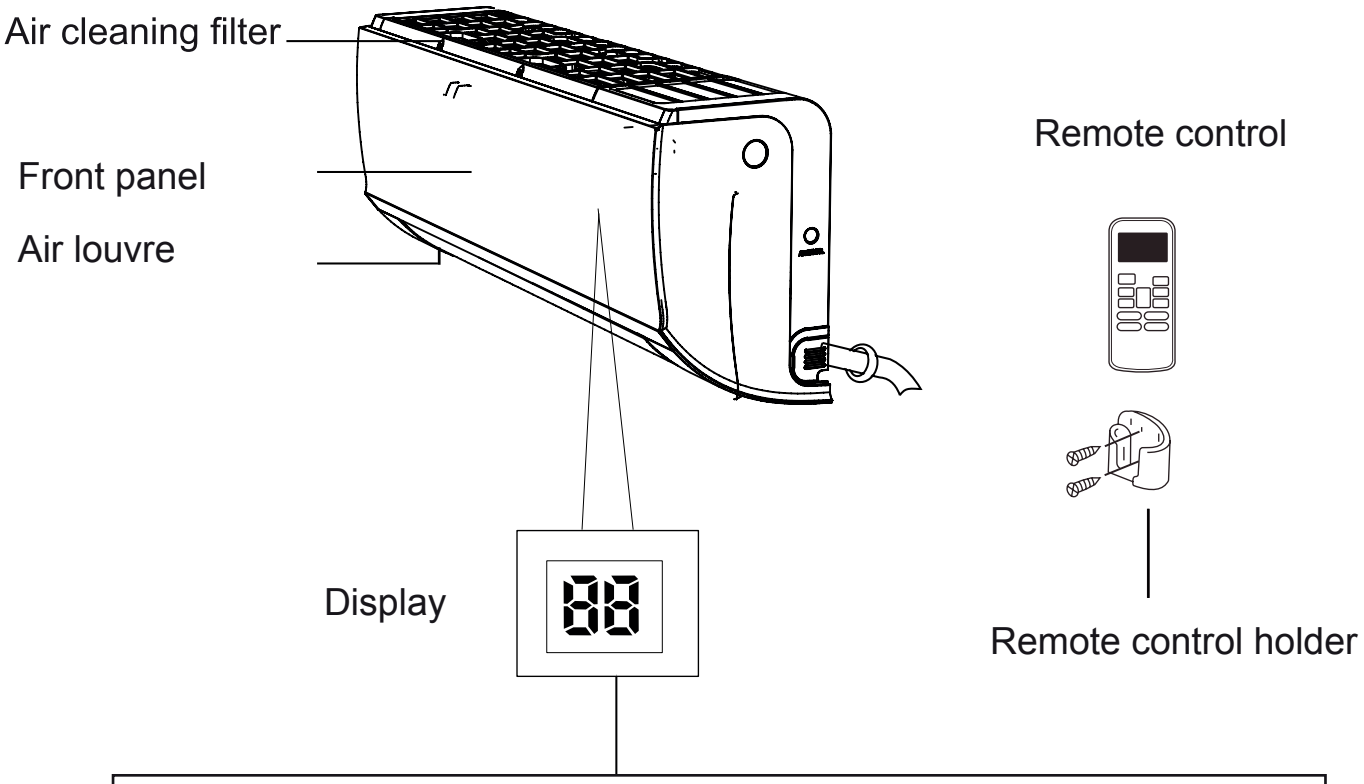

“ ON ”	Shows for 3 seconds when: • TIMER ON, SWING or TURBO is activated.
“ OF ”	Shows for 3 seconds when: • TIMER ON, SWING or TURBO is deactivated.
“ cF ”	Shows when the unit’s cold convection protection has been activated, i.e. temporarily low temperature of air blown by the inner unit.
“ dF ”	Shows when the unit is defrosting.

Fault codes may also be shown in the display. See the troubleshooting section of this user manual.

IMPORTANT! All figures in this manual are for guidance only. Indoor units may vary in appearance.

INTEGRATED FUNCTIONS

Leak detection

- The display shows “EC” when the outdoor unit detects a leak in the refrigerant circuit.

Memory function for the horizontal air louvre

- The unit remembers the motion and angle of the horizontal air intake. If the maximum angle is exceeded, it returns to the basic setting.

TURBO

- The turbo function takes the unit to the set temperature in the shortest possible time. If you are in COOL mode and press TURBO, the unit will blow cold air with a high fan speed. If you are in HEAT mode, it will blow hot.

GUARANTEED TEMPERATURE RANGE

Function (MODE)	Cooling (COOL)	Heating (HEAT)	Dehumidifying (DRY)
Room temperature	17°C ~ 32°C	17°C ~ 30°C	10°C ~ 32°C
Outdoor temperature	-15°C ~ 50°C	5°C ~ 30°C*	0°C ~ 50°C

IMPORTANT!
The unit functions optimally at these temperatures. Using the unit in other temperature conditions can affect performance/operational reliability.

* As this is an air conditioner optimised for cooling, the unit is limited to heating with an outdoor temperature of down to 5°C. The unit then switches off and restarts at 8°C. This applies to HEAT mode. The code “P3” is shown on the indoor unit’s display.

EMERGENCY OPERATION MODE

If, for any reason, the unit’s remote control does not work, you can temporarily run the unit in “emergency operation mode”. The button is on the right side of the indoor unit (see figure).

- Press the button once to start the unit in emergency operation AUTO.
- Press the button once again to start the unit in emergency operation COOL.
- Press the button once again to stop the unit.

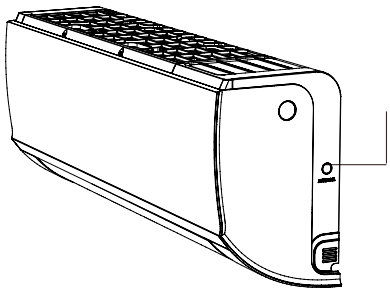

THE REMOTE CONTROL

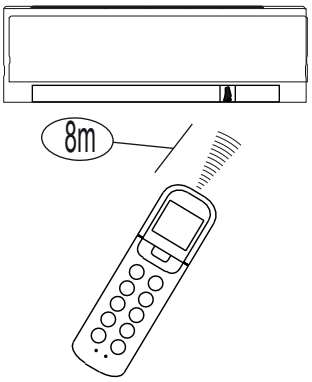

- You can use the remote control within an 8 metre radius of the indoor unit.
- Aim the remote control at the indoor unit until you hear a beep confirming reception.

IMPORTANT!

- Ensure that curtains, doors, etc. do not block the signals from the remote control to the indoor unit.
- The remote control must not be exposed to moisture/liquid.
- The remote control must not be exposed to great heat or direct sunlight.
- The indoor unit's infrared receiver must not be exposed to direct sunlight. This can affect its correct operation.
- If other items of electrical apparatus react to the remote control, move them.

FITTING NEW BATTERIES

The remote control has two AAA batteries beneath the cover on its reverse.

1. Remover the cover by pressing and pushing downwards.
2. Remove the old batteries and put in the new. Ensure that (+) and (-) are in the right places.
3. Refit the cover.

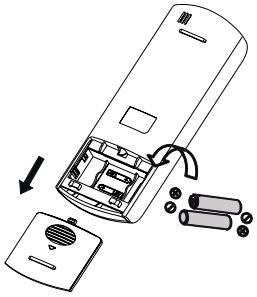

REMOTE CONTROL TECHNICAL DATA

Remote control model	RG10A1(B2S)/BGEF
Volts (batteries)	3.0 V (2 AAA batteries)
Signal reception radius	8 metres

ADJUSTING AIR FLOW DIRECTION

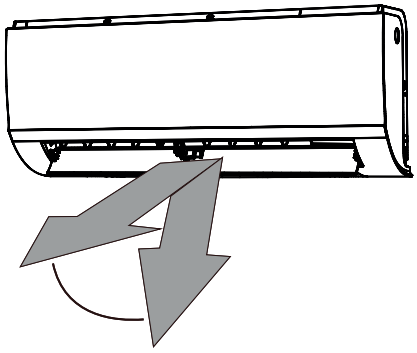

HORIZONTAL AIR LOUVRE

Use the remote control (SWING/DIRECT) to adjust air flow direction.

The horizontal louvre changes direction by 6 degrees with each press of the button, or automatically runs upwards and downwards.

IMPORTANT!
Do not use your hands to move the horizontal air louvre. This can damage the electric motor.

VERTICAL AIR LOUVRE

Adjust air flow direction manually by sliding the adjusting lever sideways (see figure below).

IMPORTANT!
Do not insert fingers in the air intake. This can result in injury/damage.

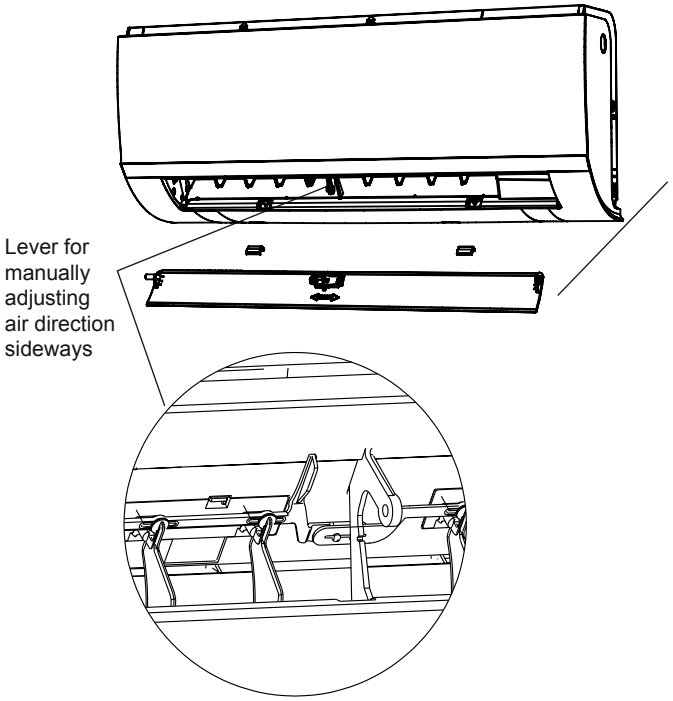

REMOVING THE AIR LOUVRE

The air louvre can be removed, e.g. for cleaning the air outlet.
To do this, remove the locking pins in the middle of the air louvre blade.

IMPORTANT! The unit must be turned off and disconnected from the power supply when doing this.

WARNING!

- When you start the unit, there is a 10 second delay before the horizontal “grid” moves.
- Do not adjust the horizontal grid manually. Programme synchronisation is lost or the unit may sustain damage.
- Always ensure that the air louvre is open when the unit is running.

TIPS FOR OPTIMUM PERFORMANCE

To get absolutely the best performance out of the unit, follow the points below.

- Adjust air flow direction so that it is not directed at people.
- Adjust the temperature for maximum comfort and not the hottest temperature you can tolerate.
- In COOL and HEAT modes, keep doors and windows closed for best results.
- Use the remote control's TIMER ON to set the time you want the unit to start.
- Do not place any objects near air intakes or outlets. This can affect unit performance or cause the unit to stop.
- To maintain best performance, clean the air filter every other week.
- Do not use the unit with the horizontal air louvre closed.

CARE AND MAINTENANCE

MAINTENANCE

Before cleaning, always check that the unit has been turned off. Clean with a soft, dry cloth. Do not use cleaning agents that contain bleaching or abrasive agents.

IMPORTANT! Before cleaning the indoor unit, it is important to disconnect it from the power supply.

CAUTION!

- A cloth slightly moistened with cold water can be used if the indoor unit is very dirty. Afterwards, dry the unit with a dry cloth.
- Never use a chemically treated cloth or a feather duster for cleaning.
- Do not use petrol, thinners, polishing agents or similar. They can deform the plastic casing or cause it to crack.
- Do not use water warmer than 40°C to clean the front panel. It can cause deformation or discolouration.
- When removing filters, never touch the metal parts. They can cut.
- Do not use water to clean the inside of the unit. This can result in electric shocks.
- Before starting cleaning, check that the unit has been switched off and disconnected from the power supply.
- Do not wash air filters in water hotter than 40°C. After washing a filter, shake it and let it dry. Do not expose filters to direct sunlight.

CLEANING THE INDOOR UNIT

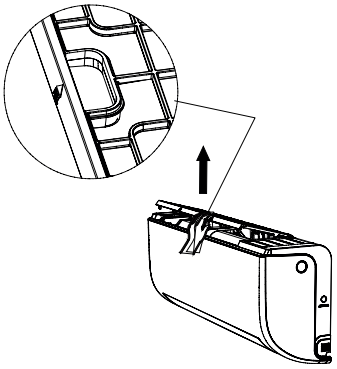

Important! Before cleaning, start by turning the unit off.

Wipe the unit with a soft, dry cloth. If the unit is very dirty, wipe it with a cloth moistened with lukewarm (max. 40°C) water.

CLEANING THE AIR FILTER

A clogged filter reduces the unit's air flow. This also affects the heating/cooling capacity. Clean the filter every other week.

Remove the filter in the top of the indoor unit by lifting the filter and then pulling it towards you (see figure to the left).

Clean the filter every other week. Vacuum the filter clean or rinse with water. Before refitting (reverse of the removal procedure), let it dry thoroughly.

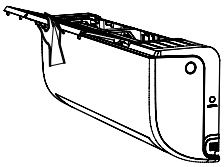

REMEMBER!

To maintain unit performance, it is recommended that the indoor unit's heat exchanger/plate set (located behind the air filter) is cleaned. This is done by spraying a cleaning agent on the heat exchanger – more information about this is available at www.midea.com.

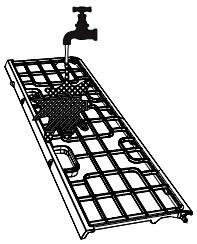

CLEANING THE OUTDOOR UNIT

1. Wipe the outdoor unit with a slightly damp cloth.
2. Remove leaves, branches, etc. from the outdoor unit.
3. Check that it is clean below the outdoor unit (so that meltwater can run away freely).

IF THE UNIT IS NOT TO BE USED FOR A LONG TIME

1. Clean the indoor unit and filters.
2. To dry the inside of the indoor unit, let the fan run for half a day.
3. Turn the unit off and disconnect it from the power supply.
4. Remove the batteries from the remote control.

WHEN THE UNIT IS TAKEN BACK INTO USE, FOLLOW THE POINTS BELOW:

- Ensure that there is power to the unit and that no power cables are damaged.
- Ensure that the air cleaning filter is in place.
- Ensure that air outlets/inlets are not blocked.

NORMAL AIR CONDITIONER FUNCTIONS/SYMPTOMS

The following can occur during operation and are entirely normal.

Compressor protection

During starting/power outages, there is a 3 – 4 minute delay before the compressor starts. This is to protect the compressor.

Cold convection protection

The unit is designed to not blow cold air in HEAT mode when the indoor unit's heat exchanger is as set out below and has not reached the set temperature:

A) When HEAT mode has just started.
B) When defrosting.

Defrosting

- If the outdoor temperature is low and the air humidity is high, frost can form on the outdoor unit during the heating process. This decreases the unit's heating effect.
- When defrosting starts, the unit switches off heating and automatically begins defrosting.
- Depending on the outdoor temperature and the amount of frost on the outdoor unit, the defrosting cycle can take from 4 to 10 minutes.
- The indoor unit's fan switches off when the unit is defrosting.
- The time between defrosting cycles varies with the indoor/outdoor temperature and air humidity.

A white mist from the indoor unit

- In an indoor environment with rather high air humidity, a white mist may come from the indoor unit. This mist can arise if, in COOL mode, there is a large temperature difference between the air intake and the air outlet.
- Mist may also appear owing to the moisture arising from defrosting when the air conditioner starts in HEAT mode after the defrosting cycle.

Noise from the unit

- You may hear a quiet hissing noise when the compressor is running or has just stopped.
- You may also hear a clicking noise, e.g. in connection with defrosting/starting. This may be because the indoor unit's heat exchanger is expanding/shrinking owing to rapid temperature changes. These can generate gentle stresses in the indoor unit.

A distinct odour from the indoor unit

- This can be caused by the indoor unit giving off odours that have spread from building materials, furniture or smoke.

The unit switches to only FAN mode

- When the unit reaches the desired indoor temperature, the compressor stops automatically and the unit switches to FAN mode. The compressor starts again when the indoor temperature rises/falls above/below the set temperature.

The heat pump is not generating as much heat

- As outdoor temperatures fall, the unit will produce less heat just as the indoor need rises. Adjust your basic heat source (e.g. the building's electric radiators) so that this system can work together with the heat pump. It should be adjusted to around 1 – 2°C below the temperature set for the heat pump. This is to ensure good operation/defrosting.

Restarting after a power outage

- When power returns after an outage, the unit restarts automatically with (thanks to the unit's memory function) all previous settings.

UNIT NOT WORKING AS IT SHOULD!

If any one of the following faults arises, switch off the unit immediately, disconnect the power supply and then reconnect it. If the fault persists, please contact Midea.

The OPERATION light, or another light, flashes.
A fuse or the residual current device blows/trips.
The remote control does not work (partially or wholly) after battery replacement.
You get any one of the following fault codes in the display: E0, E1, E2, E3... or P0, P1, P2, P3... or F0, F1, F2, F3.

Symptom	**Cause**	**Measures**
The unit does not start	Power outage?	Wait until power returns.
	Fuse blown?	Replace fuse.
	Remote control batteries dead?	Replace batteries.
	Timer set incorrectly?	Wait or activate timer setting as per the manual.
The room cannot be sufficiently cooled/ heated	Temperature setting correct?	Check the remote control settings (on page 18, see the section, “The heat pump is not generating as much heat”).
	Air filter blocked?	Clean the air filter.
	Doors or windows open?	Close doors and windows.
	Air intake/outlet of indoor/outdoor unit blocked?	Remove any blockages and restart the unit.
If the fault has not been remedied, please contact Midea. Tell us about the fault and state the unit’s model number. This is given on the rating plates of the units (indoor/outdoor).		
IMPORTANT! Do not try to repair the unit yourself.		

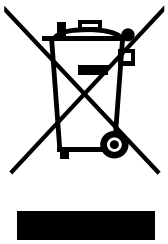

DISPOSING OF UNITS

- The product must be disposed of via an approved facility.
- Batteries (e.g. from the remote control) must be deposited at an approved collection point.
- The unit must not be disposed of via household waste or unauthorised tipping. Refrigerant can leak out and permeate into the ground water. This can have a negative impact on the environment.

SIKKERHETSFORSKRIFTER 25-26
SPESIFIKASJONER 26
FORKLARING TIL INNEDELEN 27
INNEBYGDE FUNKSJONER 28
GARANTERTE TEMPERATUROMRÅDER 28
NØDDRIFTSMODUS 28
FJERNKONTROLLEN 29
SETTE INN NYE BATTERIER 29
TEKNISKE FAKTA 29
JUSTERE LUFTSTRØMMENS RETNING 30
TIPS FOR OPTIMAL YTELSE 31
PLEIE OG VEDLIKEHOLD 31
RENGJØRING AV INNEDELEN 32
RENGJØRING AV INNEDELENS VARMEVEKSLER/LAMELLPAKKE 32
RENGJØRING AV UTEDELEN 32
NORMALE FUNKSJONER/SYMPTOMER FRA VARMEPUMPEN 33
ENHETEN FUNGERER IKKE SOM FORVENTET 34
KASSERING AV ENHET 34

SIKKERHETSFORSKRIFTER

I og med at dette produktet inneholder deler som kan forårsake skader ved feilaktig håndtering, skal du lese «Sikkerhetsforskrifter» før du tar i bruk produktet. Følg forskriftene nøye.

Varselmerker og hva de betyr:

ADVARSEL: Feilaktig håndtering kan forårsake alvorlig fare for tap av liv, alvorlig personskade osv.

FORSIKTIG: Avhengig av omstendighetene, kan feilaktig håndtering forårsake alvorlig skade.

Symbolene som er benyttet i denne håndboken og hva de betyr:

Absolutt forbudt

Følg instruksjonene nøye

ADVARSEL!

- Ikke bruk skjøteledning eller koble enheten til en stikkontakt. Det kan forårsake overoppheting, brann eller elektriske støt.
- Ikke utsett kroppen for kald og direkte lufttrekk i lengre tid.
- Ikke stikk fingre, pinner eller andre gjenstander inn i enheten.
- Brukeren må ikke installere, flytte, modifisere eller reparere enheten. Kontakt alltid nærmeste servicested.
- Trekk aldri i strømledningen.
- Ikke plasser enheten i et våtrom som f.eks. bad eller vaskerom.

- Ved unormale tilstander (f.eks. røyklukt) må du slå av enheten umiddelbart og koble fra strømmen. Kontakt Midea.
- Koble alltid strømmen fra enheten før du skal rengjøre den.
- Enheten skal installeres av et autorisert servicefirma.
- Kontakt alltid et autorisert servicefirma for å få utført service.
- Barn bør holdes under oppsyn slik at de ikke leker med enheten.

CAUTION!

- Never touch any electrical connection with wet or damp hands. This can result in an electric shock.
- Never use the unit for anything other than its intended purpose.
- Do not stand on the indoor unit.
- Do not place any object on top of the indoor unit.
- Never expose people, pets or pot plants to direct draughts of cold air.
- Never spray/apply insecticides or flammable gases on/to the unit. This can result in fires or deformation of the unit.
- Never place burning objects near the unit.
- Never let the unit stand on a mount that is damaged or rusty.
- Never install the unit near flammable gases. This can lead to a fire or explosion.

- If the unit is not to be used for a long time, disconnect it from the power supply.
- During storms/lightning, etc., turn off the unit and disconnect it from the power supply. Otherwise, there is a risk of damage to the electrical components.
- Check thoroughly that the drain hose is properly connected. If it is not, water may leak and cause damage.
- Check thoroughly that condensation can run out freely. Water damage may otherwise arise.
- The unit's electrical connection must be earthed.
- For your own safety, we recommend that a residual current device is fitted.

SPECIFICATIONS

Model	Indoor unit model designation	MSA-A-EASY25-I/U
	Outdoor unit model designation	MOX-A-EASY25-O/U
Indoor unit dimensions	L x W x H (mm)	795x225x295
Outdoor unit dimensions	L x W x H (mm)	805x330x554
Refrigerant type		R32
POWER SUPPLY		220-240V,1Ph,50Hz

Model	Indoor unit model designation	MSA-A-EASY35-I/U
	Outdoor unit model designation	MOX-A-EASY35-O/U
Indoor unit dimensions	L x W x H (mm)	795x225x295
Outdoor unit dimensions	L x W x H (mm)	805x330x554
Refrigerant type		R32
POWER SUPPLY		220-240V,1Ph,50Hz

(* in a model designation = different variants/versions of a model)

FORKLARING TIL INNEDELEN

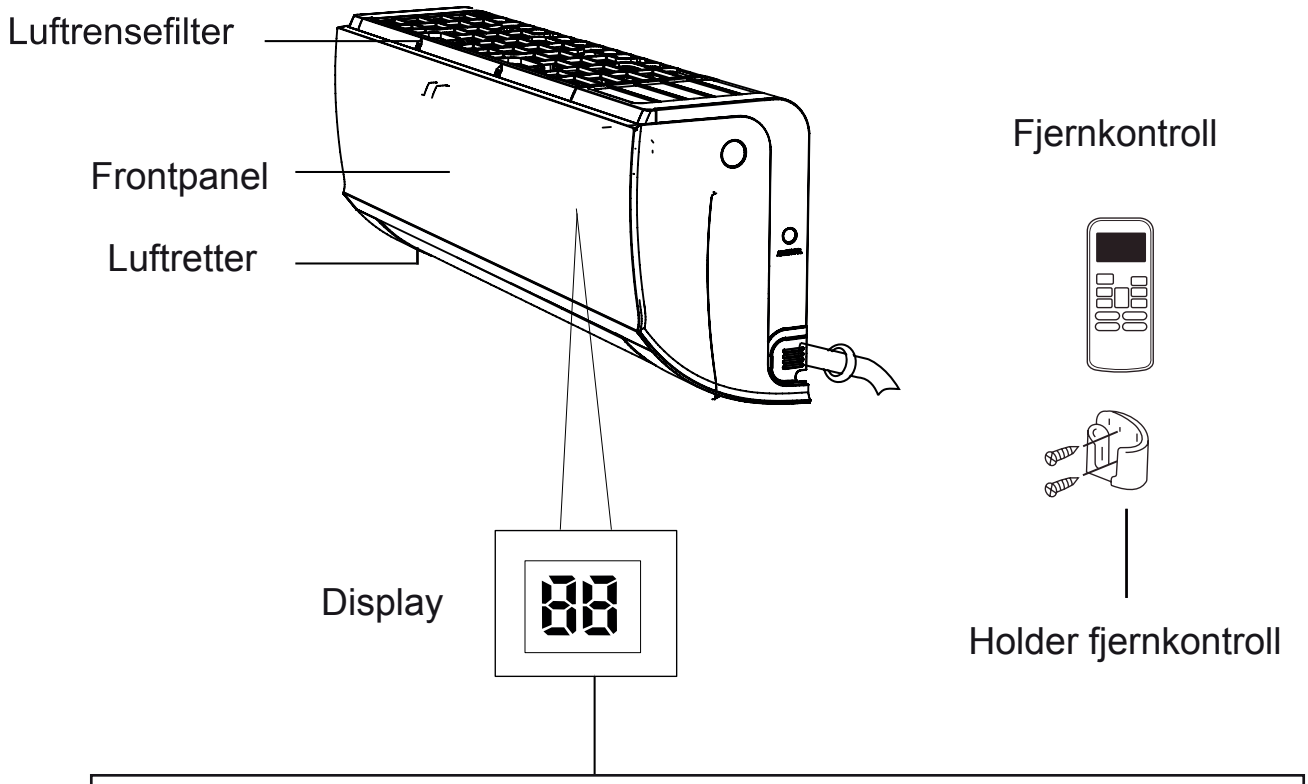

“ ON ”	Vises i 3 sekunder når: • TIMER ON, SWING eller TURBO aktiveres.
“ OF ”	Vises i 3 sekunder når: • TIMER ON, SWING eller TURBO deaktiveres.
“ cF ”	Vises når enhetens kulderasbeskyttelse er aktivert, dvs. forbigående lav utblåsningstemperatur fra innedelen.
“ dF ”	Vises når enheten avfroster.

Feilkoder kan også vises i displayet, se avsnittet om feilsøking i denne bruksanvisningen.

OBS! Alle figurer i denne håndboken har kun en forklarende funksjon – utseendet på innedelene kan variere.

INNEBYGDE FUNKSJONER

Detektor ved lekkasje

- I displayet vises ”EC” hvis utedelen oppdager en lekkasje i kjølemiddelkretsen.

Minnefunksjon for den horisontale luftretteren

- Enheten husker bevegelsen og vinkelen for det horisontale luftinntaket. Hvis maksimumsvinkelen overskrides, går den tilbake til utgangsstillingen.

TURBO

- Turbofunksjonen gjør at enheten når innstilt temperatur på kortest mulig tid. Hvis enheten er i Cool-modus og du trykker på TURBO, vil enheten blåse kaldluft med høy viftehastighet. Hvis enheten er i HEAT-modus, vil den blåse varmluft.

GARANTERTE TEMPERATUROMRÅDER

Temperatur/modus	Kjøling (COOL)	Oppvarming (HEAT)	Avfukting (DRY)
Romtemperatur	17 ~ 32 °C	17 ~ 30 °C	10 ~ 32 °C
Utetemperatur	-15 ~ 50 °C	5 ~ 30 °C*	0 ~ 50 °C

OBS!
Enheten yter optimalt ved disse temperaturene. Hvis enheten brukes under andre temperaturforhold, kan det påvirke ytelsen/driftssikkerheten.

* Ettersom dette er en luftkondisjonering som er optimalisert for kjøling, er enheten begrenset til å avgi varme ned til en utetemperatur på 5 °C. Da slås enheten av for deretter å starte igjen ved 8° C. Dette gjelder ved oppvarming. Koden «P3» i innedelens display

NØDDRIFTSMODUS

Hvis enhetens fjernkontroll av en eller annen grunn ikke fungerer, kan enheten kjøres midlertidig i såkalt nøddriftsmodus. Den tilhørende knappen finnes på høyre side av innedelen som vist på figuren.

- Trykk 1 gang på knappen for å starte enheten i nøddriftsmodusen AUTO.
- Trykk 1 gang til på knappen for å starte enheten i nøddriftsmodusen COOL (kjøling).
- Trykk 1 gang til på knappen for å stoppe enheten.

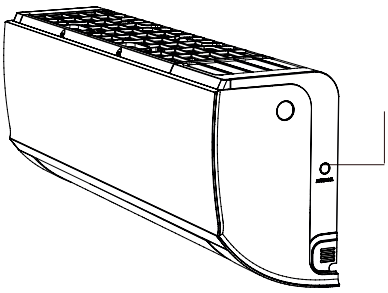

FJERNKONTROLLEN

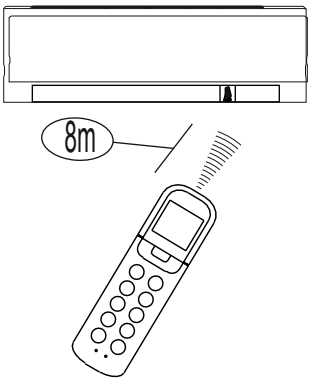

- Bruk fjernkontrollen innenfor en radius på 8 meter fra innedelen.
- Rett fjernkontrollen mot innedelen til du hører en pipetone som bekreftelse fra mottakeren.

OBS!

- Sørg for at gardiner, dører og andre ting ikke blokkerer signalene fra fjernkontrollen til innedelen.
- Fjernkontrollen må ikke utsettes for fukt/væske.
- Fjernkontrollen må ikke utsettes for høy varme eller direkte sollys.
- Den infrarøde mottakeren på innedelen må ikke utsettes for direkte sollys, ettersom dette kan påvirke den slik at den ikke fungerer som den skal.
- Flytt andre elektriske apparater hvis de reagerer på fjernkontrollen.

SETTE INN NYE BATTERIER

Fjernkontrollen har to batterier av typen AAA som er plassert under dekselet på baksiden av fjernkontrollen.

1. Ta av dekselet ved å trykke og presse nedover.
2. Ta ut de gamle batteriene og sett inn nye. Pass på at pluss (+) og minus (-) kommer på riktig sted.
3. Sett på igjen dekselet.

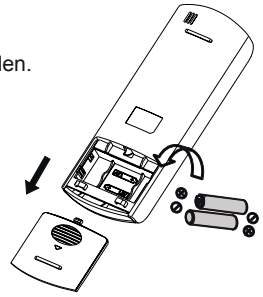

TEKNISKE FAKTA FJERNKONTROLL

Modellbetegnelse på fjernkontroll	RG10A1(B2S)/BGEF
Volt/batterier	3,0 V (2 stk. AAA-batterier)
Radius for mottak av signal	8 meter

JUSTERE LUFTSTRØMMENS RETNING

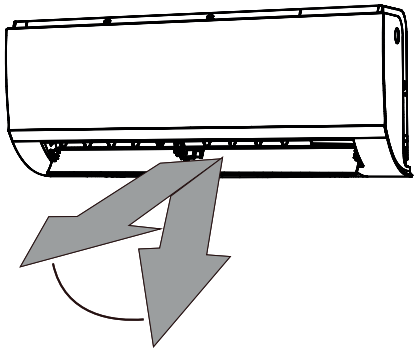

LUFTRETNINGSSPJELD HORISONTALT

Justere luftstrømmens retning med fjernkontrollen (SWING/DIRECT).

Det horisontale spjeldet endrer retning med 6 grader for hvert trykk på knappen, eller det kjøres automatisk opp og ned.

VIKTIG!
Ikke beveg manuelt på det horisontale luftretningsspjeldet med hendene, ettersom dette kan skade den elektriske motoren.

LUFTRETNINGSSPJELD VERTIKALT

Justere luftstrømmens retning manuelt ved å skyve justeringsspaken sideveis slik som vist på figuren nedenfor.

VIKTIG!
Ikke stikk fingre inn i luftinntaket. Dette kan forårsake skader

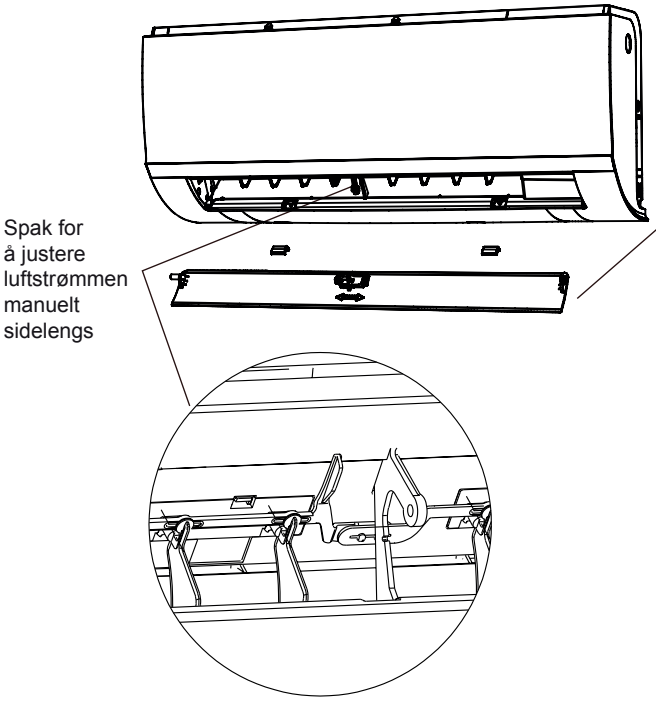

DEMONTERE LUFTRETNINGSSPJELDET

Luftretningsspjeldet kan demonteres for f.eks. å rengjøre utblåsingsåpningen.
Dette gjøres ved å løsne låsesplinten som sitter midt på spjeldbladet.

Det er VIKTIG at enheten er slått av og strømløs når dette utføres.

ADVARSEL!

- Det er en forsinkelse på 10 sekunder før den horisontale risten beveger seg når du har startet enheten.
- Ikke juster den horisontale risten manuelt, siden kan føre til at risten blir usynkronisert i programmet eller kan påføre enheten skade.
- Påse alltid at luftretningsspjeldene er åpne når enheten er i drift.

TIPS FOR OPTIMAL YTELSE

Følg punktene nedenfor å få enheten til å yte best mulig.

- Juster luftstrømmens retning slik at den ikke rettes mot mennesker.
- Juster temperaturen for å oppnå høyest mulig komfort, men ikke overdriv.
- Lukk dører og vinduer i Cool- og Heat-modus for å oppnå best mulig resultat.
- Bruk TIMER ON på fjernkontrollen til å velge tidspunktet du vil starte enheten.
- Ikke plasser gjenstander nær luftinntak eller luftutblåsingsåpning, ettersom det kan påvirke enhetens ytelse eller føre til at den stopper.
- Rengjør luftfilteret annenhver uke for å opprettholde best mulig ytelse.
- Ikke bruk enheten med den horisontale luftretteren stengt.

PLEIE OG VEDLIKEHOLD

VEDLIKEHOLD

Vær nøye med å slå av enheten før all rengjøring. Rengjør med en myk og tørr klut. Ikke bruk rengjøringsmidler som inneholder blekemidler eller skurende midler.

OBS! Det er viktig å koble strømmen fra enheten før du rengjør innedelen.

FORSIKTIG!

- Du kan benytte en klut lett fuktet med kaldt vann hvis innedelen er veldig skitten. Tørk deretter av med en tørr klut.
- Ikke bruk en kjemisk behandlet klut eller en støvkost til rengjøringen.
- Ikke bruk bensin, tynner, pussemiddel eller lignende. Dette kan føre til at plastoverflaten deformeres eller sprekker.
- Bruk ikke vann varmere enn 40 °C til rengjøring av frontpanelet, ettersom det kan forårsake deformering eller misfarging.
- Ikke berør metalldelene når du skal ta ut filteret, siden det kan føre til kuttskader.
- Ikke bruk vann til å rengjøre innsiden av enheten, for da kan det oppstå elektriske støt.
- Kontroller at enheten er slått av og strømmen koblet fra før du begynner på rengjøringen.
- Ikke vask luftfilteret i vann varmere enn 40 °C. Rist deretter filteret og la det tørke. Ikke utsett filteret for direkte sollys.

RENGJØRING AV INNEDELEN

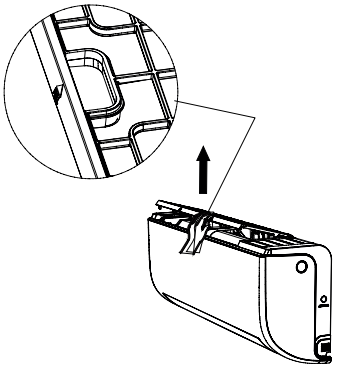

Viktig! Begynn med å slå av enheten før rengjøring.

Tørk av enheten med en myk og tørr klut. Hvis enheten er veldig skitten, kan du tørke av den med en klut som er fuktet med lunkent vann (maksimum 40 °C).

RENGJØRE LUFTFILTER

Et tilstoppet filter reduserer enhetens luftstrøm, noe som i sin tur påvirker varme- og kjølekapasiteten. Rengjør filteret annenhver uke.

Ta ut luftfilteret som sitter på innedelens overside ved å løfte det opp og deretter trekke det mot deg. Se figurene til venstre.

Rengjør filteret annenhver uke. Støvsug filteret eller skyll det med vann. La det tørke skikkelig før du setter det inn igjen i motsatt rekkefølge.

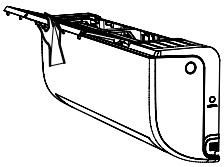

HUSK!

For å opprettholde enhetens effekt anbefales du å rengjøre innedelens varmeveksler/ lamellpakke, som du finner bak luftfilteret. Det gjør du ved å spraye et rengjøringsmiddel på varmeveksleren. Du finner mer informasjon om dette på www.midea.com.

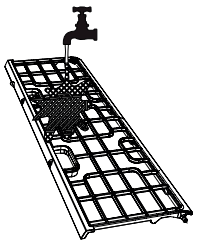

RENGJØRING AV UTEDELEN

1. Tørk av utedelen med en lett fuktet klut.
2. Fjern løv og grener fra utedelen.
3. Kontroller at det er rent under utedelen, slik at vannet fra avfrostingen kan renne fritt.

HVIS ENHETEN IKKE SKAL BRUKES OVER LENGRE TID.

1. Rengjør innedelen og filteret.
2. La viften gå en halv dag for å tørke ut på innsiden av innedelen.
3. Slå av enheten og koble fra strømmen.
4. Ta ut batteriene fra fjernkontrollen.

NÅR DU SKAL BRUKE ENHETEN IGJEN, GJØR DU SOM BESKREVET NEDENFOR:

- Påse at enheten har strømtilførsel og at ingen strømledninger er ødelagt.
- Påse at luftensefilteret er på plass.
- Påse at luftutløp og luftinntak ikke er blokkert.

NORMALE FUNKSJONER/SYMPTOMER FRA LUFTKONDISJONERINGEN

Følgende hendelser kan inntreffe under drift, noe som er helt normalt.

Kompressorbeskyttelse

Ved oppstart/strømbrudd tar det 3-4 minutter før kompressoren starter, dette for å beskytte kompressoren.

Kulderasbeskyttelse

Enheten er konstruert slik at den ikke blåser kald luft i HEAT-modusen når innedelens varmeveksler er i modusene nedenfor og ikke har nådd den innstilte temperaturen:

A) Når oppvarmingsmodusen nettopp har startet
B) Ved avfrosting

Avfrosting

- Det kan oppstå frost på utedelen under oppvarming hvis det er lav utetemperatur og høy luftfuktighet, noe som gir lavere varmeeffekt fra enheten.
- Når avfrostingen starter, slå enheten av varmen og begynner å avfroste automatisk.
- Avfrostingssyklusen kan variere mellom 4 og 10 minutter, avhengig av utetemperaturen og frostmengden som har oppstått på utedelen.
- Innedelens vifte slås av når enheten avfroster.
- Tiden mellom avfrostingene kan variere avhengig av temperaturer ute/inne samt luftfuktigheten.

Det kommer hvit damp ut av innedelen

- Det kan komme ut hvit damp fra innedelen i et inneklima med ganske høy luftfuktighet. Denne dampen kan oppstå hvis det er stor temperaturforskjell mellom luftinntak og luftutløp i COOL-modus.
- Dampen kan også komme som følge av fuktigheten som har oppstått ved avfrostingen når luftkondisjoneringen starter i HEAT-modus etter avfrostingssyklusen.

Lyd fra enheten

- Du kan høre en lav hveselyd lyd når kompressoren går eller nettopp har stoppet.
- Du kan også høre en kneppelyd f.eks. i forbindelse med avfrosting/oppstart. Dette kan skyldes at innedelens varmeveksler ekspanderer/krymper på grunn av raske temperaturendringer, som kan skape spenninger i innedelen.

Det kommer en spesiell lukt fra innedelen

- Dette kan skyldes at innedelen avgir dufter som er gjennomsyret av byggematerialer, møbler eller røyk.

Enheten skifter bare til viftemodus

- Når enheten når ønsket innetemperatur, stopper kompressoren automatisk og enheten skifter til viftemodus. Kompressoren starter igjen når innetemperaturen synker/stiger over innstilt temperatur.

Varmepumpen gir ikke like mye varme

- I forbindelse med at utetemperaturen synker utendørs, mister enheten effekt samtidig som behovet innendørs blir større. Juster hovedvarmekilden (f.eks. husets panelovner) slik at det systemet kan arbeide sammen med varmepumpen. Det skal være justert ca. 1-2 grader under den temperaturen som er innstilt på varmepumpen. Dette for å sikre god funksjon/avfrosting.

Gjenstart etter strømbrudd

- Når strømmen kommer tilbake etter strømbrudd, starter enheten automatisk igjen med alle tidligere innstillinger takket være minnefunksjonen i enheten.

ENHETEN FUNGERER IKKE SOM DEN SKAL!

Hvis noen av feilene nedenfor oppstår, slår du av enheten med det samme, kobler fra strømmen og kobler den deretter til igjen. Kontakt Midea hvis problemet vedvarer ved noen av disse feilene.

OPERATION-lampen eller en annen lampe blinker
Sikringen eller jordfeilbryteren løser ut
Fjernkontrollen fungerer ikke eller bare delvis etter batteribytte.
Hvis du får noen av følgende feilkoder i displayet. E0, E1, E2, E3... eller P0, P1, P2, P3.... eller F0, F1, F2, F3

Symptom	**Årsak**	**Tiltak**
Enheten starter ikke.	Strømbrudd?	Vent til strømmen kommer tilbake.
	Har en sikring gått?	Skift sikring.
	Er batteriene i fjernkontrollen utladet?	Skift batterier.
	Har du stilt inn timertiden feil?	Vent eller deaktiver timerinnstillingen iht. håndboken.
Rommet kan ikke kjøles/varmes opp tilstrekkelig.	Er temperaturinnstillingen korrekt?	Kontroller innstillingene på fjernkontrollen, se avsnittet «Varme-pumpen gir ikke like mye varme» på side 18.
	Luftfilteret er tilstoppet.	Rengjør luftfilteret.
	Dører eller vinduer står åpne.	Lukk dører og vinduer.
	Luftinntak eller luftutløp på innedel/utedel er blokkert.	Fjern ev. hindringer og start enheten på ny.
Kontakt Midea hvis feilen ikke er utbedret. Informer om feilen og enhetens modellnummer, som står på inne- og utedelens merkeskilt		
OBS! Forsøk ikke å reparere enheten selv.		

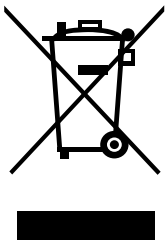

KASSERING AV ENHETEN

- Produktet skal leveres inn på godkjent innsamlingssted når det skal kasseres.
- Batterier fra f.eks. fjernkontroll skal leveres inn på godkjent innsamlingssted.
- Forbudt å kaste i vanlig husholdningsavfall eller ute i naturen, ettersom kjølemiddel kan lekke ut og ned i grunnvannet og på den måten skade miljøet.

SPLIT-TYPE ROOM AIR CONDITIONER

Owner's Manual & Installation Manual

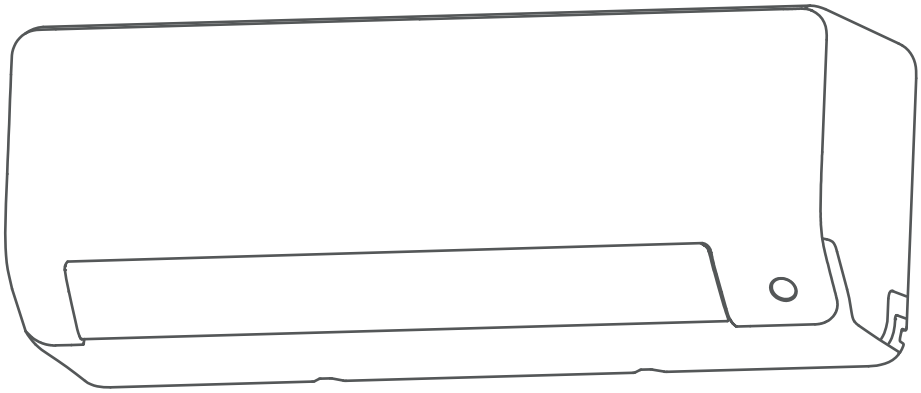

IMPORTANT NOTE:

Read this manual carefully before installing or operating your new air conditioning unit. Make sure to save this manual for future reference.

Table of Contents

Safety Precautions 04

Owner's Manual

Unit Specifications and Features.....08

1. Indoor unit display.....08
2. Operating temperature.....09
3. Other features 10
4. Setting angle of airflow.....11
5. Manual operation (without Remote).....11

Care and Maintenance.....12

Troubleshooting.....14

Installation Manual

Accessories.....17

Installation Summary - Indoor Unit 18

Unit Parts.....19

Indoor Unit Installation.....20

1. Select installation location.....20
2. Attach mounting plate to wall.....20
3. Drill wall hole for connective piping.....21
4. Prepare refrigerant piping.....22
5. Connect drain hose.....24
6. Connect signal cable.....25
7. Wrap piping and cables.....26
8. Mount indoor unit.....27

Outdoor Unit Installation.....27

1. Select installation location.....27
2. Install drain joint.....28
3. Anchor outdoor unit.....28
4. Connect signal and power cables.....30

Refrigerant Piping Connection.....31

A. Note on Pipe Length.....31
B. Connection Instructions –Refrigerant Piping.....31
   1. Cut pipe.....31
   2. Remove burrs.....32
   3. Flare pipe ends.....32
   4. Connect pipes.....32

Air Evacuation.....35

1. Evacuation Instructions.....35
2. Note on Adding Refrigerant.....36

Electrical and Gas Leak Checks.....37

Test Run.....38

Safety Precautions

Read Safety Precautions Before Operation and Installation

Incorrect installation due to ignoring instructions can cause serious damage or injury.
The seriousness of potential damage or injuries is classified as either a **WARNING** or **CAUTION**.

WARNING

This symbol indicates the possibility of personnel injury or loss of life.

CAUTION

This symbol indicates the possibility of property damage or serious consequences.

WARNING

This appliance can be used by children aged from 8 years and above and persons with reduced physical, sensory or mental capabilities or lack of experience and knowledge if they have been given supervision or instruction concerning use of the appliance in a safe way and understand the hazards involved. Children shall not play with the appliance. Cleaning and user maintenance shall not be made by children without supervision(EN Standard requirements).

This appliance is not intended for use by persons(including children) with reduced physical, sensory or mental capabilities, or lack of experience and knowledge, unless they have been given supervision or instruction concerning use of the appliance by a person responsible for their safety. Children should be supervised to ensure that they do not play with the appliance.

WARNINGS FOR PRODUCT USE

- If an abnormal situation arises (like a burning smell), immediately turn off the unit and disconnect the power. Call your dealer for instructions to avoid electric shock, fire or injury.
- **Do not** insert fingers, rods or other objects into the air inlet or outlet. This may cause injury, since the fan may be rotating at high speeds.
- **Do not** use flammable sprays such as hair spray, lacquer or paint near the unit. This may cause fire or combustion.
- **Do not** operate the air conditioner in places near or around combustible gases. Emitted gas may collect around the unit and cause explosion.
- **Do not** operate your air conditioner in a wet room such as a bathroom or laundry room. Too much exposure to water can cause electrical components to short circuit.
- **Do not** expose your body directly to cool air for a prolonged period of time.
- **Do not** allow children to play with the air conditioner. Children must be supervised around the unit at all times.
- If the air conditioner is used together with burners or other heating devices, thoroughly ventilate the room to avoid oxygen deficiency.
- In certain functional environments, such as kitchens, server rooms, etc., the use of specially designed air-conditioning units is highly recommended.

CLEANING AND MAINTENANCE WARNINGS

- Turn off the device and disconnect the power before cleaning. Failure to do so can cause electrical shock.
- **Do not** clean the air conditioner with excessive amounts of water.
- **Do not** clean the air conditioner with combustible cleaning agents. Combustible cleaning agents can cause fire or deformation.

⚠ CAUTION

- Turn off the air conditioner and disconnect the power if you are not going to use it for a long time.
- Turn off and unplug the unit during storms.
- Make sure that water condensation can drain unhindered from the unit.
- **Do not** operate the air conditioner with wet hands. This may cause electric shock.
- **Do not** use device for any other purpose than its intended use.
- **Do not** climb onto or place objects on top of the outdoor unit.
- **Do not** allow the air conditioner to operate for long periods of time with doors or windows open, or if the humidity is very high.

⚠ ELECTRICAL WARNINGS

- Only use the specified power cord. If the power cord is damaged, it must be replaced by the manufacturer, its service agent or similarly qualified persons in order to avoid a hazard.
- Keep power plug clean. Remove any dust or grime that accumulates on or around the plug. Dirty plugs can cause fire or electric shock.
- **Do not** pull power cord to unplug unit. Hold the plug firmly and pull it from the outlet. Pulling directly on the cord can damage it, which can lead to fire or electric shock.
- **Do not** modify the length of the power supply cord or use an extension cord to power the unit.
- **Do not** share the electrical outlet with other appliances. Improper or insufficient power supply can cause fire or electrical shock.
- The product must be properly grounded at the time of installation, or electrical shock may occur.
- For all electrical work, follow all local and national wiring standards, regulations, and the Installation Manual. Connect cables tightly, and clamp them securely to prevent external forces from damaging the terminal. Improper electrical connections can overheat and cause fire, and may also cause shock. All electrical connections must be made according to the Electrical Connection Diagram located on the panels of the indoor and outdoor units.
- All wiring must be properly arranged to ensure that the control board cover can close properly. If the control board cover is not closed properly, it can lead to corrosion and cause the connection points on the terminal to heat up, catch fire, or cause electrical shock.
- If connecting power to fixed wiring, an all-pole disconnection device which has at least 3mm clearances in all poles, and have a leakage current that may exceed 10mA, the residual current device(RCD) having a rated residual operating current not exceeding 30mA, and disconnection must be incorporated in the fixed wiring in accordance with the wiring rules.

TAKE NOTE OF FUSE SPECIFICATIONS

The air conditioner's circuit board (PCB) is designed with a fuse to provide overcurrent protection. The specifications of the fuse are printed on the circuit board ,such as :
Indoor unit: T3.15AL/250VAC, T5AL/250VAC, T3.15A/250VAC, T5A/250VAC, etc.
Outdoor unit: T20A/250VAC(<=18000Btu/h units), T30A/250VAC(>18000Btu/h units)
NOTE: For the units with R32 or R290 refrigerant , only the blast-proof ceramic fuse can be used.

⚠ WARNINGS FOR PRODUCT INSTALLATION

1. Installation must be performed by an authorized dealer or specialist. Defective installation can cause water leakage, electrical shock, or fire.
2. Installation must be performed according to the installation instructions. Improper installation can cause water leakage, electrical shock, or fire.
   (In North America,installation must be performed in accordance with the requirement of NEC and CEC by authorized personnel only.)
3. Contact an authorized service technician for repair or maintenance of this unit. This appliance shall be installed in accordance with national wiring regulations.
4. Only use the included accessories, parts, and specified parts for installation. Using non-standard parts can cause water leakage, electrical shock, fire, and can cause the unit to fail.
5. Install the unit in a firm location that can support the unit's weight. If the chosen location cannot support the unit's weight, or the installation is not done properly, the unit may drop and cause serious injury and damage.
6. Install drainage piping according to the instructions in this manual. Improper drainage may cause water damage to your home and property.
7. For units that have an auxiliary electric heater, **do not** install the unit within 1 meter (3 feet) of any combustible materials.
8. **Do not** install the unit in a location that may be exposed to combustible gas leaks. If combustible gas accumulates around the unit, it may cause fire.
9. Do not turn on the power until all work has been completed.
10. When moving or relocating the air conditioner, consult experienced service technicians for disconnection and reinstallation of the unit.
11. How to install the appliance to its support, please read the information for details in "indoor unit installation" and "outdoor unit installation" sections .

Note about Fluorinated Gasses(Not applicable to the unit using R290 Refrigerant)

1. This air-conditioning unit contains fluorinated greenhouse gasses. For specific information on the type of gas and the amount, please refer to the relevant label on the unit itself or the "Owner's Manual - Product Fiche " in the packaging of the outdoor unit. (European Union products only).
2. Installation, service, maintenance and repair of this unit must be performed by a certified technician.
3. Product uninstallation and recycling must be performed by a certified technician.
4. For equipment that contains fluorinated greenhouse gases in quantities of 5 tonnes of CO_2 equivalent or more, but of less than 50 tonnes of CO_2 equivalent, If the system has a leak-detection system installed, it must be checked for leaks at least every 24 months.
5. When the unit is checked for leaks, proper record-keeping of all checks is strongly recommended.

⚠ WARNING for Using R32/R290 Refrigerant

- When flammable refrigerant are employed, appliance shall be stored in a well -ventilated area where the room size corresponds to the room area as specifiec for operation.
  For R32 frigerant models:
  Appliance shall be installed, operated and stored in a room with a floor area larger than $4m^2$.
  Appliance shall not be installed in an unvertilated space, if that space is smaller than $4m^2$.
  For R290 refrigerant models, the minimum room size needed:
  <=9000Btu/h units: $13m^2$
  >9000Btu/h and <=12000Btu/h units: $17m^2$
  >12000Btu/h and <=18000Btu/h units: $26m^2$
  >18000Btu/h and <=24000Btu/h units: $35m^2$
- Reusable mechanical connectors and flared joints are not allowed indoors. (**EN** Standard Requirements).
- Mechanical connectors used indoors shall have a rate of not more than 3g/year at 25% of the maximum allowable pressure. When mechanical connectors are reused indoors, sealing parts shall be renewed. When flared joints are reused indoors, the flare part shall be re-fabricated. (**UL** Standard Requirements)
- When mechanical connectors are reused indoors, sealing parts shall be renewed. When flared joints are reused indoors, the flare part shall be re-fabricated. (**IEC** Standard Requirements)

European Disposal Guidelines

This marking shown on the product or its literature, indicates that waste electrical and eletrical equipment should not be mixed with general household waste.

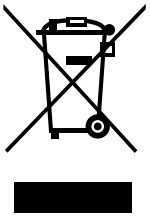

Correct Disposal of This Product
(Waste Electrical & Electronic Equipment)

This appliance contains refrigerant and other potentially hazardous materials. When disposing of this appliance, the law requires special collection and treatment. **Do not** dispose of this product as household waste or unsorted municipal waste.

When disposing of this appliance, you have the following options:

- Dispose of the appliance at designated municipal electronic waste collection facility.
- When buying a new appliance, the retailer will take back the old appliance free of charge.
- The manufacturer will take back the old appliance free of charge.
- Sell the appliance to certified scrap metal dealers.

Special notice

Disposing of this appliance in the forest or other natural surroundings endangers your health and is bad for the environment. Hazardous substances may leak into the ground water and enter the food chain.

Unit Specifications and Features

Indoor unit display

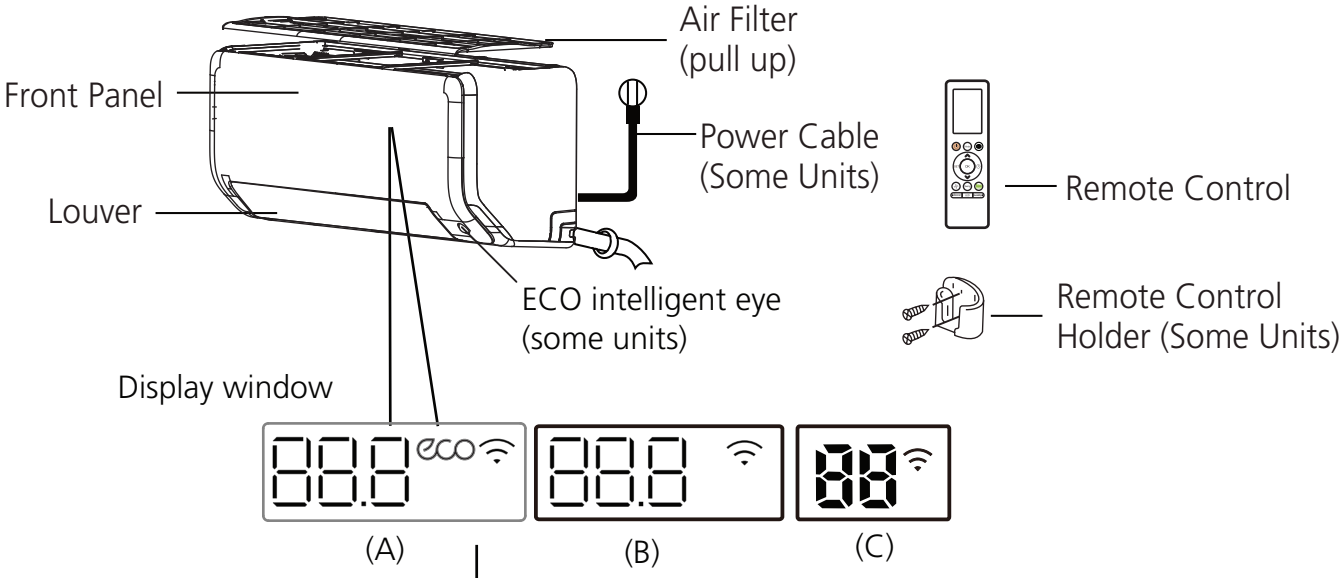

" 88.8 " "88"Displays temperature, operation feature and Error codes:

" ON " for 3 seconds when:

- TIMER ON is set (if the unit is OFF, " ON " remains on when TIMER ON is set)
- FRESH , SWING, TURBO , ECO, BREEZE AWAY, ECO INTELLIGENT EYE or SILENCE feature is turned on

Display Code Meanings

" OF " for 3 seconds when:

- TIMER OFF is set
- FRESH , SWING, TURBO , ECO, BREEZE AWAY, ECO INTELLIGENT EYE or SILENCE feature is turned off

" dF " when defrosting(for cooling & heating units)

" CL " when Active Clean feature is turned on

" FP " when 8°C(46°F) heating mode is turned on(some units)

" ECO " when ECO feature is activated(some units)

" " when wireless control feature is activated(some units)

NOTE: Different models have different front panel and display window. Not all the indicators describing below are available for the air conditioner you purchased. Please check the indoor display window of the unit you purchased.

Illustrations in this manual are for explanatory purposes. The actual shape of your indoor unit may be slightly different. The actual shape shall prevail.

Operating temperature

When your air conditioner is used outside of the following temperature ranges, certain safety protection features may activate and cause the unit to disable.

Inverter Split Type

	COOL mode	HEAT mode	DRY mode
Room Temperature	17°C - 32°C (62°F - 90°F)	0°C - 30°C (32°F - 86°F)	10°C - 32°C (50°F - 90°F)
Outdoor Temperature	0°C - 50°C (32°F - 122°F)	-15°C - 24°C (5°F - 75°F)	0°C - 50°C (32°F - 122°F)
	-15°C - 50°C (5°F - 122°F) (For models with low temp. cooling systems.)		
	0°C - 52°C (32°F - 126°F) (For special tropical models)		0°C - 52°C (32°F - 126°F) (For special tropical models)

FOR OUTDOOR UNITS WITH BASEPAN HEATER OR CRANKCASE HEATER

When outside temperature is below 0°C(32°F), we strongly recommend keeping the unit plugged in at all time to ensure smooth ongoing performance.

Fixed-speed Type

	COOL mode	HEAT mode	DRY mode
Room Temperature	17°C-32°C (62°F-90°F)	0°C-30°C (32°F-86°F)	10°C-32°C (50°F-90°F)
Outdoor Temperature	18°C-43°C (64°F-109°F)	-7°C-24°C (19°F-75°F)	11°C-43°C (52°F-109°F)
	-7°C-43°C (19°F-109°F) (For models with low-temp cooling systems)		18°C-43°C (64°F-109°F)
	18°C-52°C (64°F-126°F) (For special tropical models)		18°C-52°C (64°F-126°F) (For special tropical models)

NOTE: Room relative humidity less than 80%. If the air conditioner operates in excess of this figure, the surface of the air conditioner may attract condensation. Please sets the vertical air flow louver to its maximum angle (vertically to the floor), and set HIGH fan mode.

To further optimize the performance of your unit, do the following:

- Keep doors and windows closed.
- Limit energy usage by using TIMER ON and TIMER OFF functions.
- Do not block air inlets or outlets.
- Regularly inspect and clean air filters.

A guide on using the infrared remote is not included in this literature package. Not all the functions are available for the air conditioner, please check the indoor display and remote control of the unit you purchased.

Other Features

- **Auto-Restart(some units)**
  If the unit loses power, it will automatically restart with the prior settings once power has been restored.
- **Anti-mildew (some units)**
  When turning off the unit from COOL, AUTO (COOL), or DRY modes, the air conditioner will continue operate at very low power to dry up condensed water and prevent mildew growth.
- **Wireless Control(some units)**
  Wireless control allows you to control your air conditioner using your mobile phone and a wireless connection.
  For the USB device access, replacement, maintenance operations must be carried out by professional staff.
- **Louver Angle Memory(some units)**
  When turning on your unit, the louver will automatically resume its former angle.
- **Active Clean function**

-- The Active Clean Technology washes away dust, mold, and grease that may cause odors when it adheres to the heat exchanger by automatically freezing and then rapidly thawing the frost. A "pi-pi" sound will be heard.
The Active clean operation is used to produce more condensed water to improve the cleaning effect, and the cold air will blow out. After cleaning, the internal wind wheel then keeps operating with hot air to blow-dry the evaporator, thus preventing the growth of mold and keeping the inside clean.

-- When this function is turned on, the indoor unit display window appears "CL " , after 20 to 45 minutes, the unit will turn off automatically and cancel Active Clean function.

- **Breeze Away (some units)**
  This feature avoids direct air flow blowing on the body and make you feel indulging in silky coolness.
- **Refrigerant Leakage Detection(some units)**
  The indoor unit will automatically display "EL0C" when it detects refrigerant leakage.
- **ECO Intelligent eye(some units)**
  The system is controlled intelligently under Intelligent eye mode. It can detect the people's activities in the room. In cooling mode, when you are away for 30 minutes, the unit will automatically lower the frequency to save energy(for Inverter models only). And the unit will automatically start and resume operation if sensing human activity again.
- **Sleep Operation**
  The SLEEP function is used to decrease energy use while you sleep (and don't need the same temperature settings to stay comfortable). This function can only be activated via remote control. And the Sleep function is not available in FAN or DRY mode.
  When in COOL mode, the unit will increase the temperature by 1°C (2°F) after 1 hour, and will increase an additional 1°C (2°F) after another hour.
  When in HEAT mode, the unit will decrease the temperature by 1°C (2°F) after 1 hour, and will decrease an additional 1°C (2°F) after another hour.
  The sleep feature will stop after 8 hours and the system will keep running with final situation.

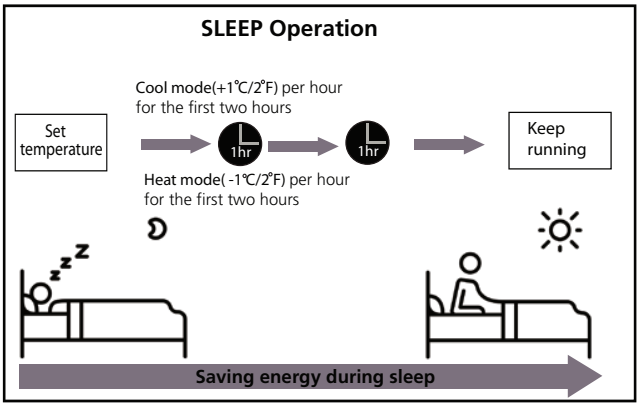

NOTE:
For multi-split air condtioners, the following functions are not available:
Active clean function, Silence feature, Breeze away function, Refrigerant leakage detection function and Eco feature.

- **Setting Angle of Air Flow**

Setting vertical angle of air flow

While the unit is on, use the **SWING** button on remote control to set the direction (vertical angle) of airflow. Please refer to the Remote Control Manual for details.

NOTE ON LOUVER ANGLES

When using COOL or DRY mode, do not set louver at too vertical an angle for long periods of time. This can cause water to condense on the louver blade, which will drop on your floor or furnishings.
When using COOL or HEAT mode, setting the louver at too vertical an angle can reduce the performance of the unit due to restricted air flow.

Setting horizontal angle of air flow

The horizontal angle of the airflow must be set manually. Grip the deflector rod (See **Fig.B**) and manually adjust it to your preferred direction. **For some units,** the horizontal angle of the airflow can be set by remote control. please refer to the Remote Control Manual.

Manual Operation(without remote)

⚠ CAUTION

The manual button is intended for testing purposes and emergency operation only. Please do not use this function unless the remote control is lost and it is absolutely necessary. To restore regular operation, use the remote control to activate the unit. Unit must be turned off before manual operation.

To operate your unit manually:

1. Locate the **MANUAL CONTROL button** on the right-hand side panel of the unit.
2. Press the **MANUAL CONTROL button** one time to activate FORCED AUTO mode.
3. Press the **MANUAL CONTROL button** again to activate FORCED COOLING mode.
4. Press the **MANUAL CONTROL button** a third time to turn the unit off.

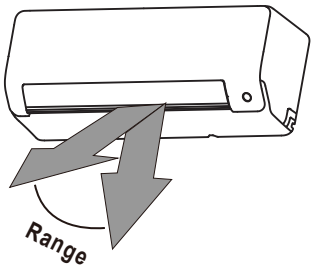

NOTE: Do not move louver by hand. This will cause the louver to become out of sync. If this occurs, turn off the unit and unplug it for a few seconds, then restart the unit. This will reset the louver.

Fig. A

⚠ CAUTION

Do not put your fingers in or near the blower and suction side of the unit. The high-speed fan inside the unit may cause injury.

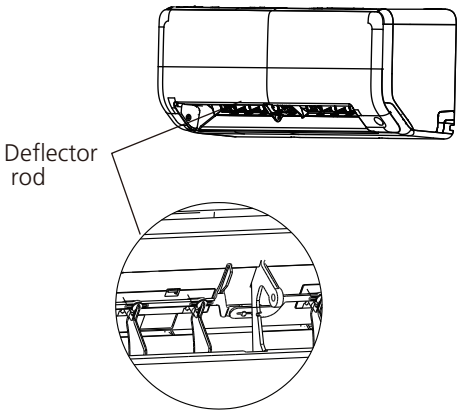

Fig. B

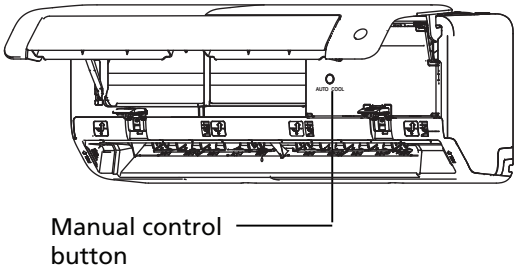

Fig. C

Care and Maintenance

Cleaning Your Indoor Unit

⚠ BEFORE CLEANING OR MAINTENANCE

ALWAYS TURN OFF YOUR AIR CONDITIONER SYSTEM AND DISCONNECT ITS POWER SUPPLY BEFORE CLEANING OR MAINTENANCE.

⚠ CAUTION

Only use a soft, dry cloth to wipe the unit clean. If the unit is especially dirty, you can use a cloth soaked in warm water to wipe it clean.

- **Do not** use chemicals or chemically treated cloths to clean the unit
- **Do not** use benzene, paint thinner, polishing powder or other solvents to clean the unit. They can cause the plastic surface to crack or deform.
- **Do not** use water hotter than 40°C (104°F) to clean the front panel. This can cause the panel to deform or become discolored.

Cleaning Your Air Filter

A clogged air filter can reduce the cooling efficiency of your unit, can also make the air flow irregular and too much noisy, so please clean the air filter as often as necessary. Once the abnormal noise of air flow is heard, please clean the air filter immediately.

1. The air filter is on the top of the air conditioner.
2. Hold both side of the top filter in the place marked with "PULL", then pull it upwards.
3. If your filter has small air freshening filters, unclip them from the larger filter. Clean these air freshening filters with a hand-held vacuum.
4. Clean the large air filter with warm, soapy water. Be sure to use a mild detergent.
5. Rinse the filter with fresh water, then shake off excess water.
6. Dry it in a cool, dry place, and refrain from exposing it to direct sunlight.
7. When dry, re-clip the air freshening filter to the larger filter, then install it back on the indoor unit.

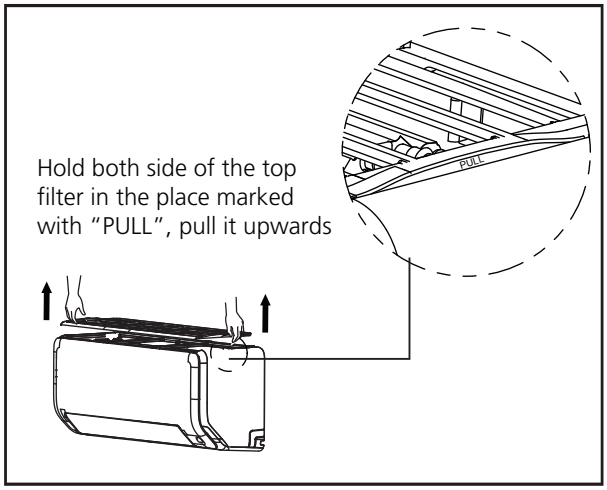

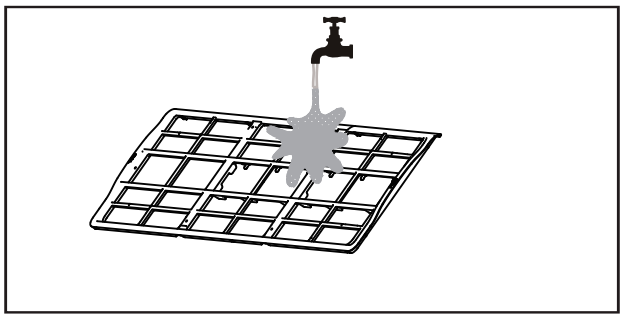

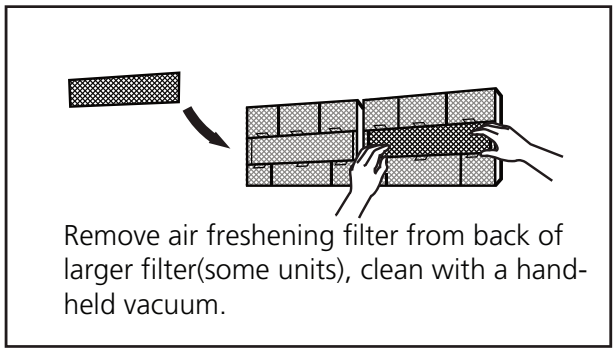

⚠ CAUTION

- Before changing the filter or cleaning, turn off the unit and disconnect its power supply.
- When removing filter, do not touch metal parts in the unit. The sharp metal edges can cut you.
- Do not use water to clean the inside of the indoor unit. This can destroy insulation and cause electrical shock.
- Do not expose filter to direct sunlight when drying. This can shrink the filter.

Air Filter Reminders (Optional)

Air Filter Cleaning Reminder

After 240 hours of use, the display window on the indoor unit will flash "CL." This is a reminder to clean your filter. After 15 seconds, the unit will revert to its previous display.

To reset the reminder, press the **LED** button on your remote control 4 times, or press the **MANUAL CONTROL** button 3 times. If you don't reset the reminder, the "CL" indicator will flash again when you restart the unit.

Air Filter Replacement Reminder

After 2,880 hours of use, the display window on the indoor unit will flash "nF." This is a reminder to replace your filter. After 15 seconds, the unit will revert to its previous display.

To reset the reminder, press the **LED** button on your remote control 4 times, or press the **MANUAL CONTROL** button 3 times. If you don't reset the reminder, the "nF" indicator will flash again when you restart the unit.

⚠ CAUTION

- Any maintenance and cleaning of outdoor unit should be performed by an authorized dealer or a licensed service provider.
- Any unit repairs should be performed by an authorized dealer or a licensed service provider.

Maintenance – Long Periods of Non-Use

If you plan not to use your air conditioner for an extended period of time, do the following:

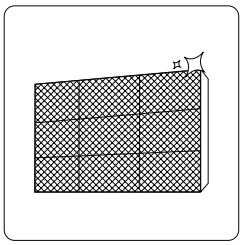

Clean all filters

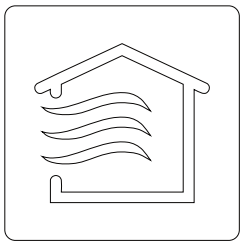

Turn on FAN function until unit dries out completely

Turn off the unit and disconnect the power

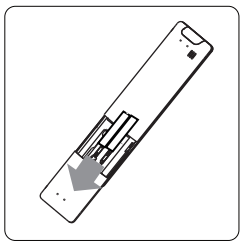

Remove batteries from remote control

Maintenance – Pre-Season Inspection

After long periods of non-use, or before periods of frequent use, do the following:

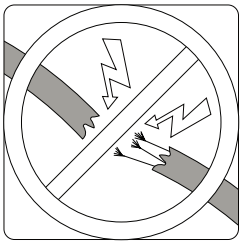

Check for damaged wires

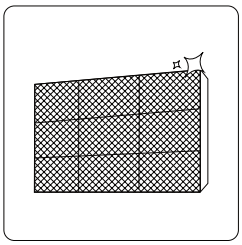

Clean all filters

Check for leaks

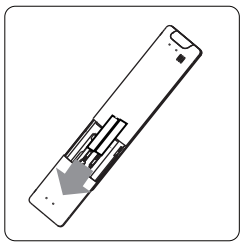

Replace batteries

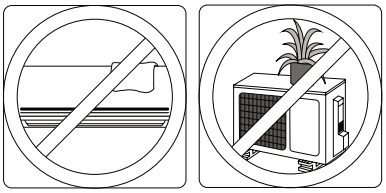

Make sure nothing is blocking all air inlets and outlets

Troubleshooting

⚠ SAFETY PRECAUTIONS

If ANY of the following conditions occurs, turn off your unit immediately!

- The power cord is damaged or abnormally warm
- You smell a burning odor
- The unit emits loud or abnormal sounds
- A power fuse blows or the circuit breaker frequently trips
- Water or other objects fall into or out of the unit

DO NOT ATTEMPT TO FIX THESE YOURSELF! CONTACT AN AUTHORIZED SERVICE PROVIDER IMMEDIATELY!

Common Issues

The following problems are not a malfunction and in most situations will not require repairs.

Issue	Possible Causes
Unit does not turn on when pressing ON/OFF button	The Unit has a 3-minute protection feature that prevents the unit from overloading. The unit cannot be restarted within three minutes of being turned off.
The unit changes from COOL/HEAT mode to FAN mode	The unit may change its setting to prevent frost from forming on the unit. Once the temperature increases, the unit will start operating in the previously selected mode again.
	The set temperature has been reached, at which point the unit turns off the compressor. The unit will continue operating when the temperature fluctuates again.
The indoor unit emits white mist	In humid regions, a large temperature difference between the room's air and the conditioned air can cause white mist.
Both the indoor and outdoor units emit white mist	When the unit restarts in HEAT mode after defrosting, white mist may be emitted due to moisture generated from the defrosting process.
The indoor unit makes noises	A rushing air sound may occur when the louver resets its position.
	A squeaking sound may occur after running the unit in HEAT mode due to expansion and contraction of the unit's plastic parts.
Both the indoor unit and outdoor unit make noises	Low hissing sound during operation: This is normal and is caused by refrigerant gas flowing through both indoor and outdoor units.
	Low hissing sound when the system starts, has just stopped running, or is defrosting: This noise is normal and is caused by the refrigerant gas stopping or changing direction.
	Squeaking sound: Normal expansion and contraction of plastic and metal parts caused by temperature changes during operation can cause squeaking noises.

Issue	Possible Causes
The outdoor unit makes noises	The unit will make different sounds based on its current operating mode.
Dust is emitted from either the indoor or outdoor unit	The unit may accumulate dust during extended periods of non-use, which will be emitted when the unit is turned on. This can be mitigated by covering the unit during long periods of inactivity.
The unit emits a bad odor	The unit may absorb odors from the environment (such as furniture, cooking, cigarettes, etc.) which will be emitted during operations.
	The unit's filters have become moldy and should be cleaned.
The fan of the outdoor unit does not operate	During operation, the fan speed is controlled to optimize product operation.
Operation is erratic, unpredictable, or unit is unresponsive	Interference from cell phone towers and remote boosters may cause the unit to malfunction. In this case, try the following: • Disconnect the power, then reconnect. • Press ON/OFF button on remote control to restart operation.

NOTE: If problem persists, contact a local dealer or your nearest customer service center. Provide them with a detailed description of the unit malfunction as well as your model number.

Troubleshooting

When troubles occur, please check the following points before contacting a repair company.

Problem	Possible Causes	Solution
Poor Cooling Performance	Temperature setting may be higher than ambient room temperature	Lower the temperature setting
	The heat exchanger on the indoor or outdoor unit is dirty	Clean the affected heat exchanger
	The air filter is dirty	Remove the filter and clean it according to instructions
	The air inlet or outlet of either unit is blocked	Turn the unit off, remove the obstruction and turn it back on
	Doors and windows are open	Make sure that all doors and windows are closed while operating the unit
	Excessive heat is generated by sunlight	Close windows and curtains during periods of high heat or bright sunshine
	Too many sources of heat in the room (people, computers, electronics, etc.)	Reduce amount of heat sources
	Low refrigerant due to leak or long-term use	Check for leaks, re-seal if necessary and top off refrigerant
	SILENCE function is activated (optional function)	SILENCE function can lower product performance by reducing operating frequency. Turn off SILENCE function.

Problem	Possible Causes	Solution
The unit is not working	Power failure	Wait for the power to be restored
	The power is turned off	Turn on the power
	The fuse is burned out	Replace the fuse
	Remote control batteries are dead	Replace batteries
	The Unit's 3-minute protection has been activated	Wait three minutes after restarting the unit
	Timer is activated	Turn timer off
The unit starts and stops frequently	There's too much or too little refrigerant in the system	Check for leaks and recharge the system with refrigerant.
	Incompressible gas or moisture has entered the system.	Evacuate and recharge the system with refrigerant
	The compressor is broken	Replace the compressor
	The voltage is too high or too low	Install a manostat to regulate the voltage
Poor heating performance	The outdoor temperature is extremely low	Use auxiliary heating device
	Cold air is entering through doors and windows	Make sure that all doors and windows are closed during use
	Low refrigerant due to leak or long-term use	Check for leaks, re-seal if necessary and top off refrigerant
Indicator lamps continue flashing **Error code appears and begins with the letters as the following in the window display of indoor unit:** • **E(x), P(x), F(x)** • **EH(xx), EL(xx), EC(xx)** • **PH(xx), PL(xx), PC(xx)**	The unit may stop operation or continue to run safely. If the indicator lamps continue to flash or error codes appear, wait for about 10 minutes. The problem may resolve itself. If not, disconnect the power, then connect it again. Turn the unit on. If the problem persists, disconnect the power and contact your nearest customer service center.	

NOTE: If your problem persists after performing the checks and diagnostics above, turn off your unit immediately and contact an authorized service center.

Accessories

The air conditioning system comes with the following accessories. Use all of the installation parts and accessories to install the air conditioner. Improper installation may result in water leakage, electrical shock and fire, or cause the equipment to fail. The items are not included with the air conditioner must be purchased separately.

Name of Accessories	Q'ty(pc)	Shape	Name of Accessories	Q'ty(pc)	Shape
Manual	2-3		**Remote controller**	1	
Drain joint (for cooling & heating models)	1		**Battery**	2	
Seal (for cooling & heating models)	1		**Remote controller holder(optional)**	1	
Mounting plate	1		**Fixing screw for remote controller holder(optional)**	2	
Anchor	5~8 (depending on models)		**Small Filter** (Need to be installed on the back of main air filter by the authorized technician while installing the machine)	1~2 (depending on models)	
Mounting plate fixing screw	5~8 (depending on models)				

Name	Shape		Quantity(PC)
Connecting pipe assembly	**Liquid side**	**Φ6.35(1/4in)**	Parts you must purchase separately. Consult the dealer about the proper pipe size of the unit you purchased.
		Φ9.52(3/8in)	
	Gas side	**Φ9.52(3/8in)**	
		Φ12.7(1/2in)	
		Φ16(5/8in)	
		Φ19(3/4in)	
Magnetic ring and belt (if supplied ,please refer to the wiring diagram to install it on the connective cable.)	1 2 3 Pass the belt through the hole of the Magnetic ring to fix it on the cable		Varies by model

Accessories

Installation Summary - Indoor Unit

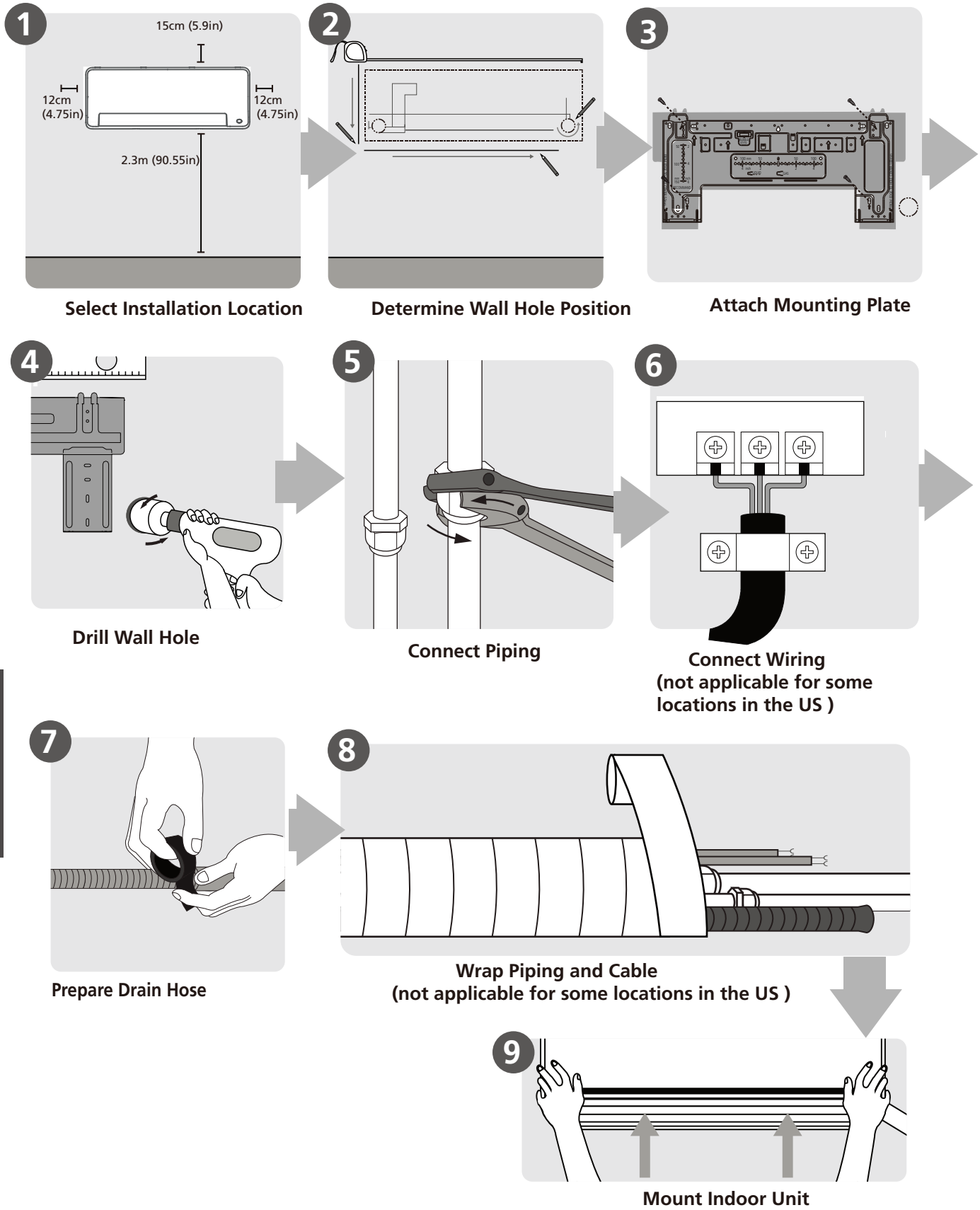

Unit Parts

NOTE: The installation must be performed in accordance with the requirement of local and national standards. The installation may be slightly different in different areas.

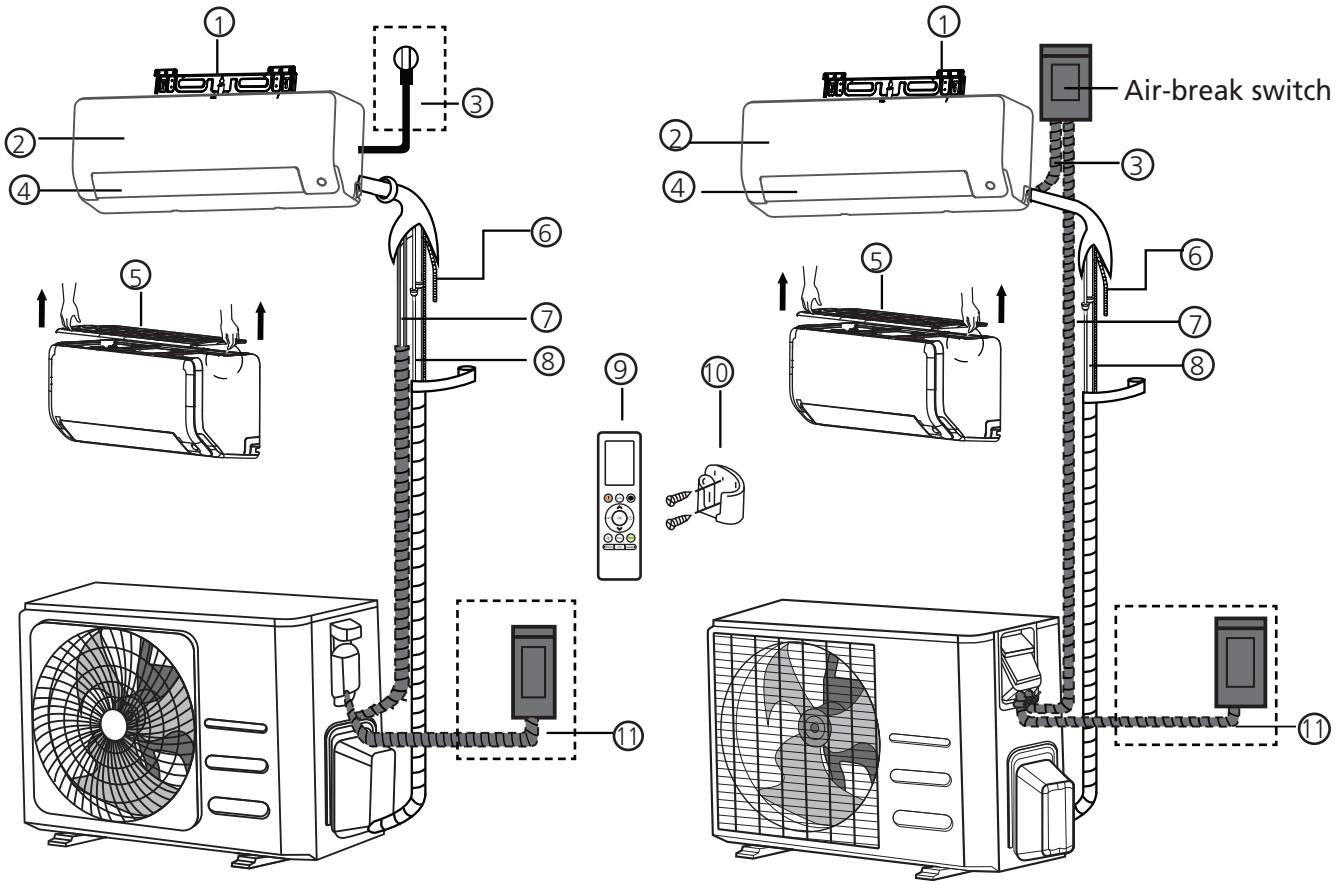

(**1**) (**2**)

① Wall Mounting Plate
② Front Panel
③ Power Cable (Some Units)
④ Louver
⑤ Air filter(pull it out)
⑥ Drainage Pipe
⑦ Signal Cable
⑧ Refrigerant Piping
⑨ Remote Controller
⑩ Remote Controller Holder (Some Units)
⑪ Outdoor Unit Power Cable (Some Units)

NOTE ON ILLUSTRATIONS

Illustrations in this manual are for explanatory purposes. The actual shape of your indoor unit may be slightly different. The actual shape shall prevail.

Indoor Unit Installation

Installation Instructions – Indoor unit

PRIOR TO INSTALLATION

Before installing the indoor unit, refer to the label on the product box to make sure that the model number of the indoor unit matches the model number of the outdoor unit.

Step 1: Select installation location

Before installing the indoor unit, you must choose an appropriate location. The following are standards that will help you choose an appropriate location for the unit.

Proper installation locations meet the following standards:

- ☑ Good air circulation
- ☑ Convenient drainage
- ☑ Noise from the unit will not disturb other people
- ☑ Firm and solid—the location will not vibrate
- ☑ Strong enough to support the weight of the unit
- ☑ A location at least one meter from all other electrical devices (e.g., TV, radio, computer)

DO NOT install unit in the following locations:

- ⊘ Near any source of heat, steam, or combustible gas
- ⊘ Near flammable items such as curtains or clothing
- ⊘ Near any obstacle that might block air circulation
- ⊘ Near the doorway
- ⊘ In a location subject to direct sunlight

NOTE ABOUT WALL HOLE:

If there is no fixed refrigerant piping:

While choosing a location, be aware that you should leave ample room for a wall hole (see **Drill wall hole for connective piping** step) for the signal cable and refrigerant piping that connect the indoor and outdoor units. The default position for all piping is the right side of the indoor unit (while facing the unit). However, the unit can accommodate piping to both the left and right.

Refer to the following diagram to ensure proper distance from walls and ceiling:

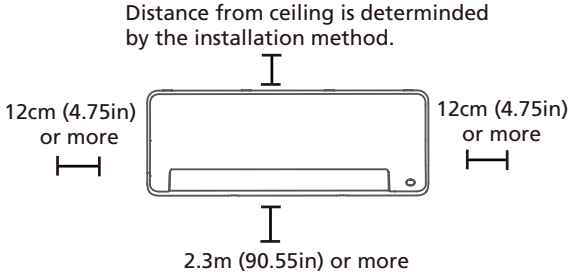

NOTE:

- **If no need the back holder to prop up the unit:**
  Finishing the pipe and cable connections before mount the indoor unit on the wall. If the instllation height is limited, 5cm from the ceiling is allowable, but this can lower product performance. To ensure enough space to install and remove the top air filter, keep at least 10cm or more from the ceiling.
- **Need the back holder to prop up the unit:**
  If connecting pipe and cable with front panel open, the minimum distance from ceiling is 22cm or more, if connecting pipe and cable without front panel(remove it) , the minimum distance from ceiling is 11cm or more.

Step 2: Attach mounting plate to wall

The mounting plate is the device on which you will mount the indoor unit.

- Remove the screw that attaches the mounting plate to the back of the indoor unit.

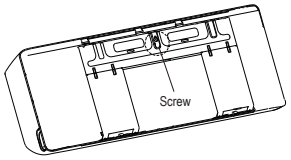

- Secure the mounting plate to the wall with the screws provided. Make sure that mounting plate is flat against the wall.

NOTE FOR CONCRETE OR BRICK WALLS:

If the wall is made of brick, concrete, or similar material, drill 5mm-diameter (0.2in-diameter) holes in the wall and insert the sleeve anchors provided. Then secure the mounting plate to the wall by tightening the screws directly into the clip anchors.

Step 3: Drill wall hole for connective piping

1. Determine the location of the wall hole based on the position of the mounting plate. Refer to **Mounting Plate Dimensions.**
2. Using a 65mm (2.5in) or 90mm(3.54in) (depending on models)core drill, drill a hole in the wall. Make sure that the hole is drilled at a slight downward angle, so that the outdoor end of the hole is lower than the indoor end by about 5mm to 7mm (0.2-0.275in). This will ensure proper water drainage.

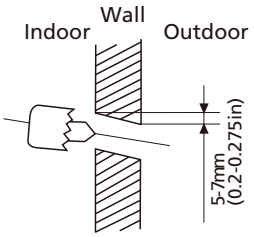

NOTE: When the gas side connective pipe is Φ 16mm(5/8in) or more, the wall hole should be 90mm(3.54in).

3. Place the protective wall cuff in the hole. This protects the edges of the hole and will help seal it when you finish the installation process.

⚠ CAUTION

When drilling the wall hole, make sure to avoid wires, plumbing, and other sensitive components.

MOUNTING PLATE DIMENSIONS

Different models have different mounting plates. For the convenience of installation, there are bubble level, carved dimensions on the mounting plate. Please install the plate and drill wall hole according to the information of the mounting plate. See the figures below.

Correct orientation of Mounting Plate

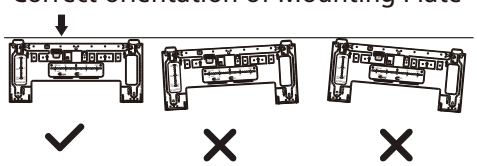

Unit: mm(inch)

Horizontal direction ruler

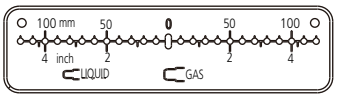

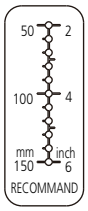

Vertical direction ruler

CAUTION: The Bubble level on the mounting plate can't be removed. If it is broken, make sure to clean up the leaking liquid.

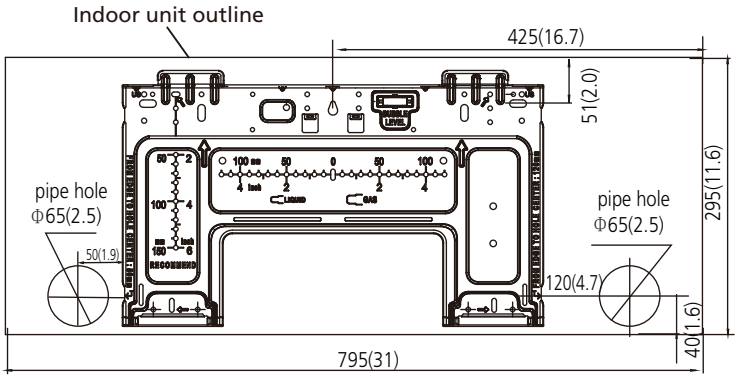

Model A

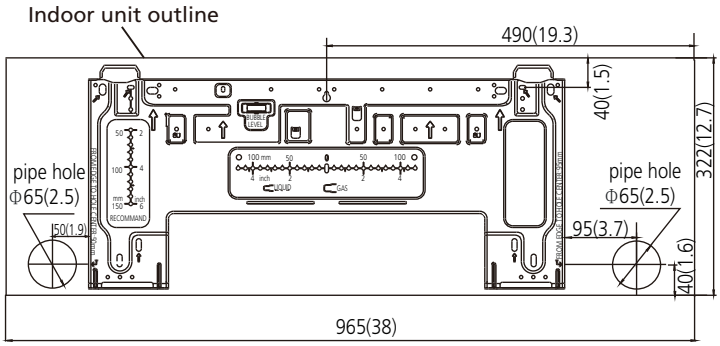

Model B

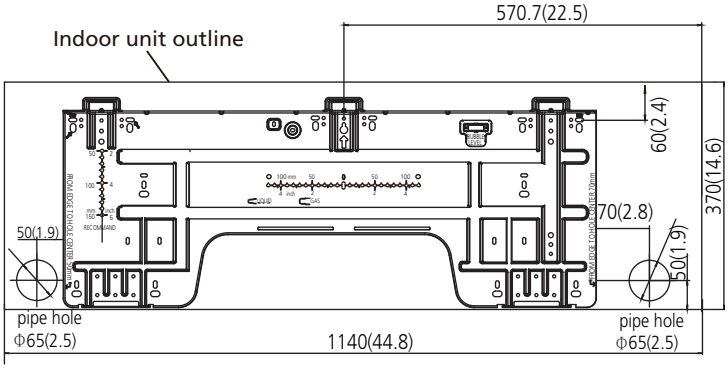

Model C

Step 4: Prepare refrigerant piping

The refrigerant piping is inside an insulating sleeve attached to the back of the unit. You must prepare the piping before passing it through the hole in the wall. Refer to the **Refrigerant Piping Connection** section of this manual for detailed instructions on pipe flaring and flare torque requirements, technique, etc.

NOTE ON PIPING ANGLE

Refrigerant piping can exit the indoor unit from four different angles:

- Left-hand side
- Left rear
- Right-hand side
- Right rear

Refer to **figures below** for details.

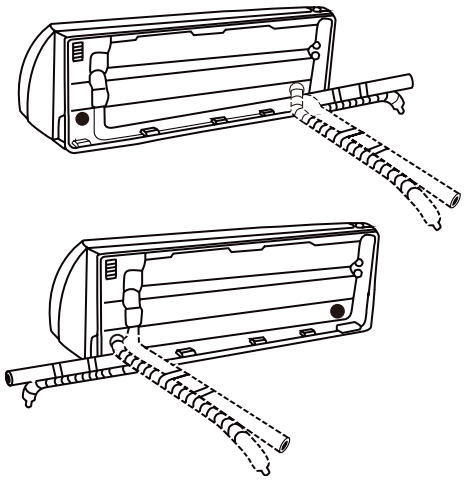

NOTE ON PIPING CONNECTING

- In some locations of US, a conduit tube must be used to connect the cable.
  To ensure an enough space for the pipes running and the machine is against the wall after installation, It is recommended to attach the drain hose to the right-hand side (when you're facing the back of the unit).
- When choose Left-hand side or Right-hand side piping, please make sure that the pipes come out horizontally so as not to affect the lower panel installtion.

⚠ CAUTION

Be extremely careful not to dent or damage the piping while bending them away from the unit. Any dents in the piping will affect the unit's performance.

If refrigerant piping is already embedded in the wall, do the following:

Step 1:Hook the indoor unit on the mounting plate:

1. Keep in mind that the hooks on the mounting plate are smaller than the holes on the back of the unit.
If you find that you don't have ample room to connect embedded pipes to the indoor unit, the unit can be adjusted left or right by about 30-50mm (1.25-1.95in), depending on the model.

Move to left or right

Step 2: Prepare refrigerant piping:

1. Open and fix the position of the panel, then, open the covers of the two lock blocks, unscrew the screw showed in the picture below, then hold both sides of the lower panel in the place marked "PULL", pull it upwards to release the buckles, then take the lower panel down.

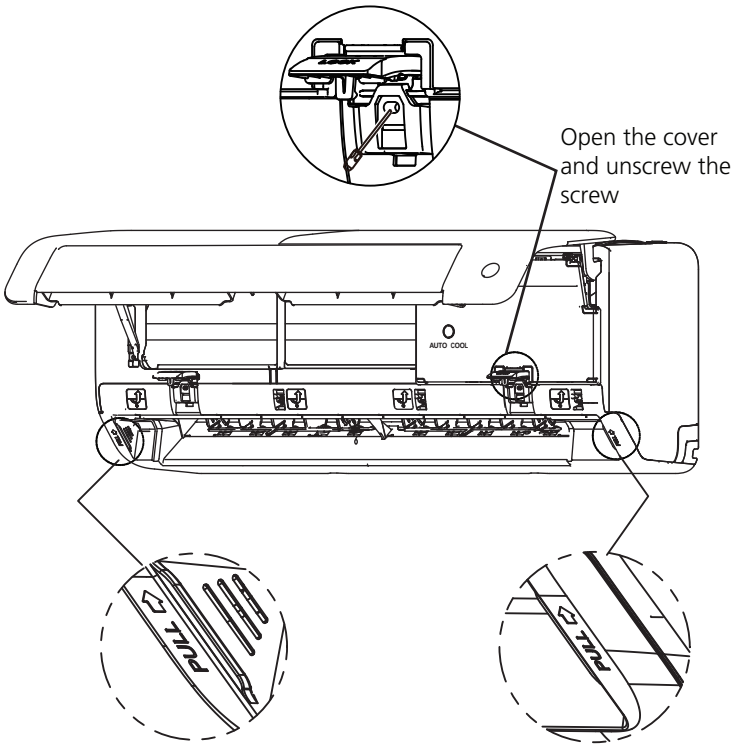

Model A

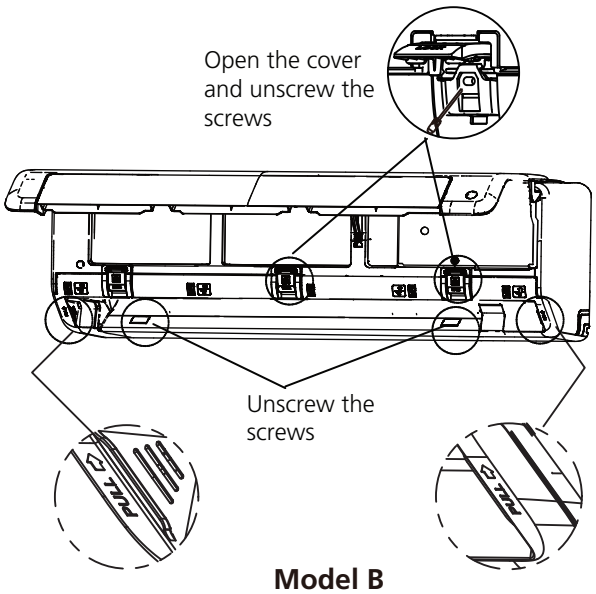

Model B

2. Use the holder at the back of the unit to prop up the unit, giving you enough room to connect the refrigerant piping, signal cable, and drain hose.

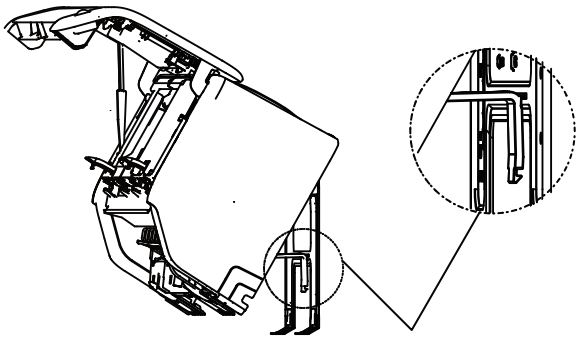

Use the holder at the back of the unit against on the mounting plate to prop up the unit

Step 3. Connect drain hose and refrigerant piping (refer to **Refrigerant Piping Connection** section of this manual for instructions).

Step 4. Keep pipe connection point exposed to perform the leak test (refer to **Electrical Checks and Leak Checks** section of this manual).

Step 5. After the leak test, wrap the connection point with insulation tape.

Step 6. Remove the bracket or wedge that is propping with insulation tape.

Step 7. Using even pressure, push down on the bottom half of the unit. Keep pushing down until the unit snaps onto the hooks along the bottom of the mounting plate.

If there is no refrigerant piping embedded in the wall, do the following:

1. Based on the position of the wall hole relative to the mounting plate, choose the side from which the piping will exit the unit.
2. If the wall hole is behind the unit, keep the knock-out panel in place. If the wall hole is to the side of the indoor unit, remove the plastic knock-out panel from that side of the unit. (See figure below). This will create a slot through which your piping can exit the unit. Use needle nose pliers if the plastic panel is too difficult to remove by hand.

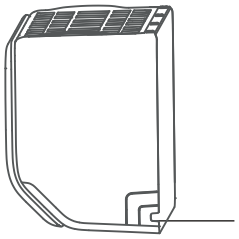

Knock-out Panel (cut depending on the actual size needed)

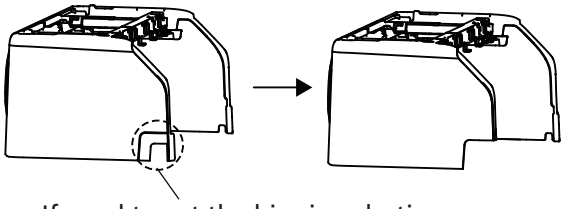

If need to cut the big size plastic panel, cut as shown above.

3. Use scissors to cut down the length of the insulating sleeve to reveal about 40mm (1.57in) of the refrigerant piping. This serves two purposes:
   - To facilitate the **Refrigerant Piping Connection** process.
   - To facilitage **Gas Leak Checks** and enable you to check for dents
4. Use the holder at the back of the unit to prop up the unit, giving you enough room to connect the refrigerant piping, signal cable, and drain hose.
5. Connect the indoor unit's refrigerant piping to the connective piping that will join the indoor and outdoor units. Refer to the **Refrigerant Piping Connection** section of this manual for detailed instructions.
6. Based on the position of the wall hole relative to the mounting plate, determine the necessary angle of your piping.
7. Grip the refrigerant piping at the base of the bend.
8. Slowly, with even pressure, bend the piping towards the hole. **Do not** dent or damage the piping during the process.

Step 5: Connect drain hose

By default, the drain hose is attached to the left-hand side of unit (when you're facing the back of the unit). However, it can also be attached to the right-hand side. To ensure proper drainage, attach the drain hose on the same side that your refrigerant piping exits the unit.

- Wrap the connection point firmly with Teflon tape to ensure a good seal and to prevent leaks.
- Remove the air filter and pour a small amount of water into the drain pan to make sure that water flows from the unit smoothly.

NOTE ON DRAIN HOSE PLACEMENT

Make sure to arrange the drain hose according to the following figures.

⊘ **DO NOT** kink the drain hose.

⊘ **DO NOT** create a water trap.

⊘ **DO NOT** put the end of drain hose in water or a container that will collect water.

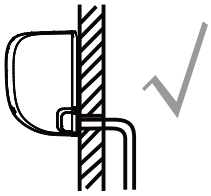

CORRECT

Make sure there are no kinks or dent in drain hose to ensure proper drainage.

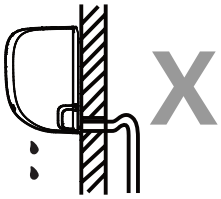

NOT CORRECT

Kinks in the drain hose will create water traps.

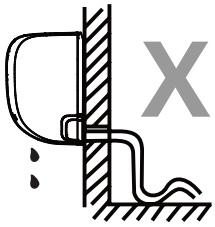

NOT CORRECT

Kinks in the drain hose will create water traps.

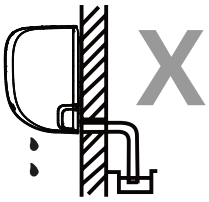

NOT CORRECT

Do not place the end of the drain hose in water or in containers that collect water. This will prevent proper drainage.

PLUG THE UNUSED DRAIN HOLE

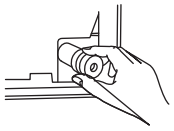

To prevent unwanted leaks you must plug the unused drain hole with the rubber plug provided.

BEFORE PERFORMING ANY ELECTRICAL WORK, READ THESE REGULATIONS

1. All wiring must comply with local and national electrical codes, regulations and must be installed by a licensed electrician.
2. All electrical connections must be made according to the Electrical Connection Diagram located on the panels of the indoor and outdoor units.
3. If there is a serious safety issue with the power supply, stop work immediately. Explain your reasoning to the client, and refuse to install the unit until the safety issue is properly resolved.
4. Power voltage should be within 90-110% of rated voltage. Insufficient power supply can cause malfunction, electrical shock, or fire.
5. If connecting power to fixed wiring, install a surge protector and main power switch with a capacity of 1.5 times the maximum current of the unit.
6. If connecting power to fixed wiring, a switch or circuit breaker that disconnects all poles and has a contact separation of at least 1/8in (3mm) must be incorporated in the fixed wiring. The qualified technician must use an approved circuit breaker or switch.
7. Only connect the unit to an individual branch circuit outlet. Do not connect another appliance to that outlet.
8. Make sure to properly ground the air conditioner.
9. Every wire must be firmly connected. Loose wiring can cause the terminal to overheat, resulting in product malfunction and possible fire.
10. Do not let wires touch or rest against refrigerant tubing, the compressor, or any moving parts within the unit.
11. If the unit has an auxiliary electric heater, it must be installed at least 1 meter (40in) away from any combustible materials.
12. To avoid getting an electric shock, never touch the electrical components soon after the power supply has been turned off. After turning off the power, always wait 10 minutes or more before you touch the electrical components.

⚠ WARNING

BEFORE PERFORMING ANY ELECTRICAL OR WIRING WORK, TURN OFF THE MAIN POWER TO THE SYSTEM.

Step 6: Connect signal cable

The signal cable enables communication between the indoor and outdoor units. You must first choose the right cable size before preparing it for connection.

Cable Types

- **Indoor Power Cable** (if applicable): H05VV-F or H05V2V2-F
- **Outdoor Power Cable:** H07RN-F
- **Signal Cable:** H07RN-F

Minimum Cross-Sectional Area of Power and Signal Cables (For reference)

Rated Current of Appliance (A)	Nominal Cross-Sectional Area (mm^2)
> 3 and ≤ 6	0.75
> 6 and ≤ 10	1
> 10 and ≤ 16	1.5
> 16 and ≤ 25	2.5
> 25 and ≤ 32	4
> 32 and ≤ 40	6

CHOOSE THE RIGHT CABLE SIZE

The size of the power supply cable, signal cable, fuse, and switch needed is determined by the maximum current of the unit. The maximum current is indicated on the nameplate located on the side panel of the unit. Refer to this nameplate to choose the right cable, fuse, or switch.

1. Open and fix the position of the panel, then, open the covers of the two lock blocks, unscrew the screw showed in the picture below, then hold both sides of the lower panel in the place marked "PULL", pull it upwards to release the buckles, then take the lower panel down.
2. Open the wire box cover to connect the cable.

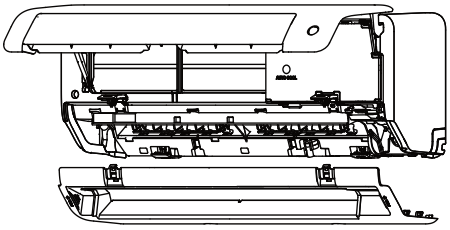

First open the front panel, then remove the lower panel.

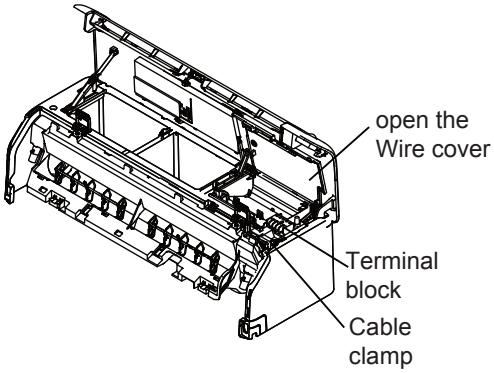

⚠ WARNING

ALL WIRING MUST BE PERFORMED STRICTLY IN ACCORDANCE WITH THE WIRING DIAGRAM LOCATED ON THE BACK OF THE INDOOR UNIT'S FRONT PANEL .

3. Unscrew the cable clamp below the terminal block and place it to the side.
4. Facing the back of the unit, remove the plastic panel on the bottom left-hand side.
5. Feed the signal wire through this slot, from the back of the unit to the front.
6. Facing the front of the unit, connect the wire according to the indoor unit's wiring diagram, connect the u-lug and firmly screw each wire to its corresponding terminal.

⚠ CAUTION

DO NOT MIX UP LIVE AND NULL WIRES

This is dangerous, and can cause the air conditioning unit to malfunction.

7. After checking to make sure every connection is secure, use the cable clamp to fasten the signal cable to the unit. Screw the cable clamp down tightly.
8. Replace the wire cover on the front of the unit, and the plastic panel on the back.

NOTE ABOUT WIRING

THE WIRING CONNECTION PROCESS MAY DIFFER SLIGHTLY BETWEEN UNITS AND REGIONS.

Step 7: Wrappping and cables

Before passing the piping, drain hose, and the signal cable through the wall hole, you must bundle them together to save space, protect them, and insulate them(This may not applicable for some locations in US).

1. Bundle the drain hose, refrigerant pipes, and signal cable as shown below:

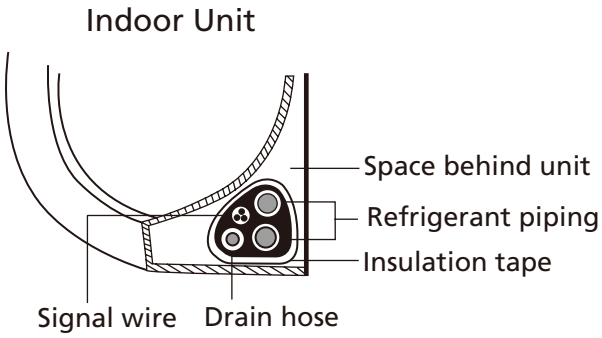

DRAIN HOSE MUST BE ON BOTTOM

Make sure that the drain hose is at the bottom of the bundle. Putting the drain hose at the top of the bundle can cause the drain pan to overflow, which can lead to fire or water damage.

DO NOT INTERTWINE SIGNAL CABLE WITH OTHER WIRES

While bundling these items together, do not intertwine or cross the signal cable with any other wiring.

2. Using adhesive vinyl tape, attach the drain hose to the underside of the refrigerant pipes.
3. Using insulation tape, wrap the signal wire, refrigerant pipes, and drain hose tightly together. Double-check that all items are bundled.

DO NOT WRAP ENDS OF PIPING

When wrapping the bundle, keep the ends of the piping unwrapped. You need to access them to test for leaks at the end of the installation process (refer to **Electrical Checks**

Step 8: Mount indoor unit

If you installed new connective piping to the outdoor unit, do the following:

1. If you have already passed the refrigerant piping through the hole in the wall, proceed to Step 4.
2. Otherwise, double-check that the ends of the refrigerant pipes are sealed to prevent dirt or foreign materials from entering the pipes.
3. Slowly pass the wrapped bundle of refrigerant pipes, drain hose, and signal wire through the hole in the wall.
4. Hook the top of the indoor unit on the upper hook of the mounting plate.
5. Check that unit is hooked firmly on mounting by applying slight pressure to the left and right-hand sides of the unit. The unit should not jiggle or shift.
6. Using even pressure, push down on the bottom half of the unit. Keep pushing down until the unit snaps onto the hooks along the bottom of the mounting plate.
7. Again, check that the unit is firmly mounted by applying slight pressure to the left and the right-hand sides of the unit.

Outdoor Unit Installation

Install the unit by following local codes and regulations , there may be differ slightly between different regions.

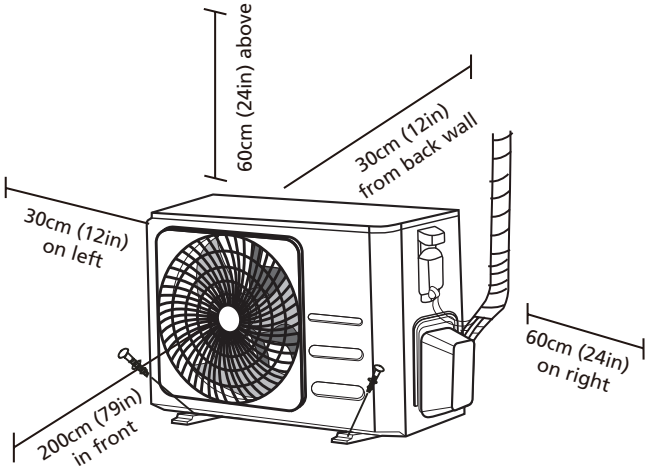

Installation Instructions – Outdoor unit

Step 1: Select installation location

Before installing the outdoor unit, you must choose an appropriate location. The following are standards that will help you choose an appropriate location for the unit.

Proper installation locations meet the following standards:

- ☑ Meets all spatial requirements shown in Installation Space Requirements above.
- ☑ Good air circulation and ventilation
- ☑ Firm and solid—the location can support the unit and will not vibrate
- ☑ Noise from the unit will not disturb others
- ☑ Protected from prolonged periods of direct sunlight or rain
- ☑ Where snowfall is anticipated, raise the unit above the base pad to prevent ice buildup and coil damage. Mount the unit high enough to be above the average accumulated area snowfall. The minimum height must be 18 inches

<u>DO NOT</u> install unit in the following locations:

- ⊘ Near an obstacle that will block air inlets and outlets
- ⊘ Near a public street, crowded areas, or where noise from the unit will disturb others
- ⊘ Near animals or plants that will be harmed by hot air discharge
- ⊘ Near any source of combustible gas
- ⊘ In a location that is exposed to large amounts of dust
- ⊘ In a location exposed to a excessive amounts of salty air

SPECIAL CONSIDERATIONS FOR EXTREME WEATHER

If the unit is exposed to heavy wind:

Install unit so that air outlet fan is at a 90° angle to the direction of the wind. If needed, build a barrier in front of the unit to protect it from extremely heavy winds.
See Figures below.

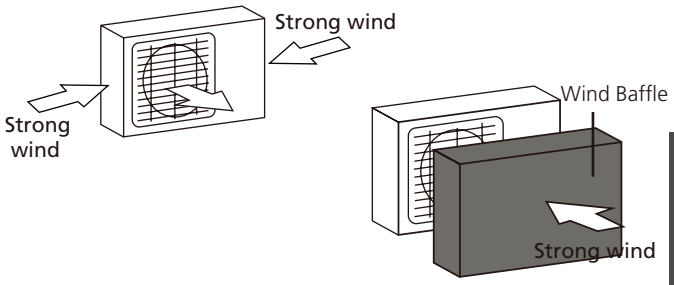

If the unit is frequently exposed to heavy rain or snow:

Build a shelter above the unit to protect it from the rain or snow. Be careful not to obstruct air flow around the unit.

If the unit is frequently exposed to salty air (seaside):

Use outdoor unit that is specially designed to resist corrosion.

Step 2: Install drain joint(Heat pump unit only)

Before bolting the outdoor unit in place, you must install the drain joint at the bottom of the unit. Note that there are two different types of drain joints depending on the type of outdoor unit.

If the drain joint comes with a rubber seal (see **Fig. A**), do the following:

1. Fit the rubber seal on the end of the drain joint that will connect to the outdoor unit.
2. Insert the drain joint into the hole in the base pan of the unit.
3. Rotate the drain joint 90° until it clicks in place facing the front of the unit.
4. Connect a drain hose extension (not included) to the drain joint to redirect water from the unit during heating mode.

If the drain joint doesn't come with a rubber seal (see **Fig. B**), do the following:

1. Insert the drain joint into the hole in the base pan of the unit. The drain joint will click in place.
2. Connect a drain hose extension (not included) to the drain joint to redirect water from the unit during heating mode.

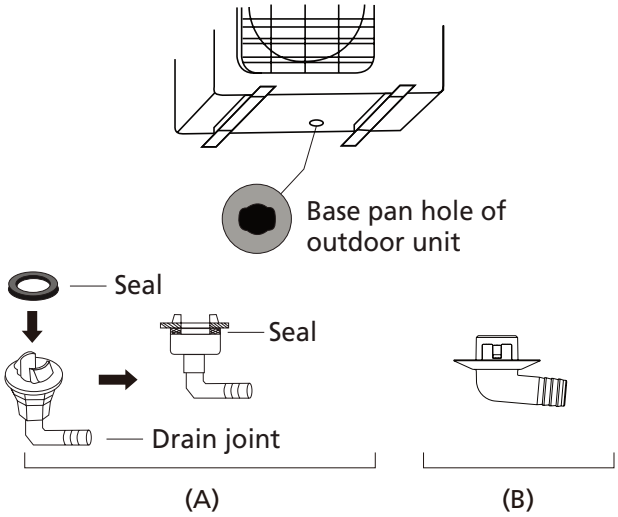

IN COLD CLIMATES

In cold climates, make sure that the drain hose is as vertical as possible to ensure swift water drainage. If water drains too slowly, it can freeze in the hose and flood the unit.

Step 3: Anchor outdoor unit

The outdoor unit can be anchored to the ground or to a wall-mounted bracket with bolt(M10). Prepare the installation base of the unit according to the dimensions below.

UNIT MOUNTING DIMENSIONS

The following is a list of different outdoor unit sizes and the distance between their mounting feet. Prepare the installation base of the unit according to the dimensions below.

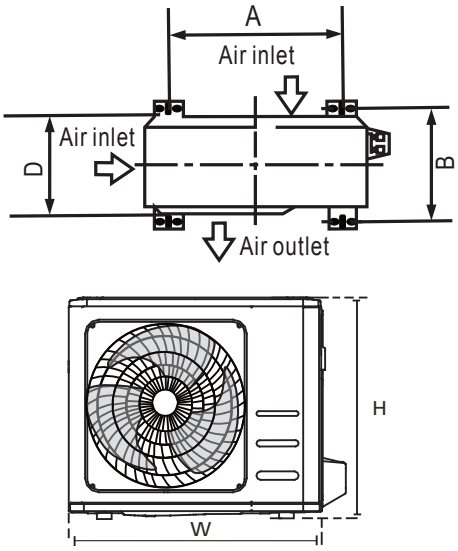

Rows of series installation
The relations between H, A and L are as follows.

	L	A
L ≤ H	L ≤ 1/2H	25 cm / 9.8" or more
	1/2H < L ≤ H	30 cm / 11.8" or more
L > H	Can not be installed	

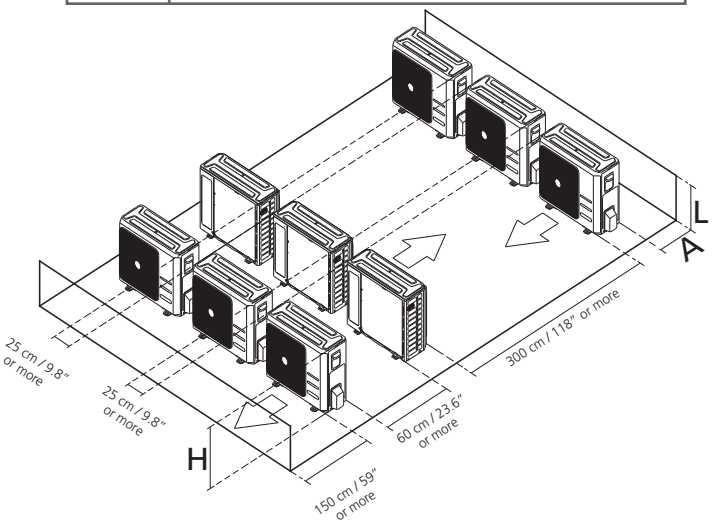

Outdoor Unit Dimensions (mm) W x H x D	Mounting Dimensions Distance A (mm)	Distance B (mm)
681x434x285 (26.8”x 17.1”x 11.2”)	460 (18.1”)	292 (11.5”)
700x550x270 (27.5”x 21.6”x 10.6”)	450 (17.7”)	260 (10.2”)
700x550x275 (27.5”x 21.6”x 10.8”)	450 (17.7”)	260 (10.2”)
720x495x270 (28.3”x 19.5”x 10.6”)	452 (17.8”)	255 (10.0”)
728x555x300 (28.7”x 21.8”x 11.8”)	452 (17.8”)	302(11.9”)
765x555x303 (30.1”x 21.8”x 11.9”)	452 (17.8”)	286(11.3”)
770x555x300 (30.3”x 21.8”x 11.8”)	487 (19.2”)	298 (11.7”)
805x554x330 (31.7”x 21.8”x 12.9”)	511 (20.1”)	317 (12.5”)
800x554x333 (31.5”x 21.8”x 13.1”)	514 (20.2”)	340 (13.4”)
845x702x363 (33.3”x 27.6”x 14.3”)	540 (21.3”)	350 (13.8”)
890x673x342 (35.0”x 26.5”x 13.5”)	663 (26.1”)	354 (13.9”)
946x810x420 (37.2”x 31.9”x 16.5”)	673 (26.5”)	403 (15.9”)
946x810x410 (37.2”x 31.9”x 16.1”)	673 (26.5”)	403 (15.9”)

If you will install the unit on the ground or on a concrete mounting platform, do the following:

1. Mark the positions for four expansion bolts based on dimensions chart.
2. Pre-drill holes for expansion bolts.
3. Place a nut on the end of each expansion bolt.
4. Hammer expansion bolts into the pre-drilled holes.
5. Remove the nuts from expansion bolts, and place outdoor unit on bolts.
6. Put washer on each expansion bolt, then replace the nuts.
7. Using a wrench, tighten each nut until snug.

⚠ WARNING

WHEN DRILLING INTO CONCRETE, EYE PROTECTION IS RECOMMENDED AT ALL TIMES.

If you will install the unit on a wall-mounted bracket , do the following:

⚠ CAUTION

Make sure that the wall is made of solid brick, concrete, or of similarly strong material. **The wall must be able to support at least four times the weight of the unit.**

1. Mark the position of bracket holes based on dimensions chart.
2. Pre-drill the holes for the expansion bolts.
3. Place a washer and nut on the end of each expansion bolt.
4. Thread expansion bolts through holes in mounting brackets, put mounting brackets in position, and hammer expansion bolts into the wall.
5. Check that the mounting brackets are level.
6. Carefully lift unit and place its mounting feet on brackets.
7. Bolt the unit firmly to the brackets.
8. If allowed, install the unit with rubber gaskets to reduce vibrations and noise.

Step 4: Connect signal and power cables

The outside unit's terminal block is protected by an electrical wiring cover on the side of the unit. A comprehensive wiring diagram is printed on the inside of the wiring cover.

⚠ WARNING

BEFORE PERFORMING ANY ELECTRICAL OR WIRING WORK, TURN OFF THE MAIN POWER TO THE SYSTEM.

1. Prepare the cable for connection:

USE THE RIGHT CABLE

- Indoor Power Cable (if applicable): H05VV-F or H05V2V2-F
- Outdoor Power Cable: H07RN-F
- Signal Cable: H07RN-F

CHOOSE THE RIGHT CABLE SIZE

The size of the power supply cable, signal cable, fuse, and switch needed is determined by the maximum current of the unit. The maximum current is indicated on the nameplate located on the side panel of the unit. Refer to this nameplate to choose the right cable, fuse, or switch.

a. Using wire strippers, strip the rubber jacket from both ends of cable to reveal about 40mm (1.57in) of the wires inside.
b. Strip the insulation from the ends of the wires.
c. Using a wire crimper, crimp u-lugs on the ends of the wires.

PAY ATTENTION TO LIVE WIRE

While crimping wires, make sure you clearly distinguish the Live ("L") Wire from other wires.

⚠ WARNING

ALL WIRING WORK MUST BE PERFORMED STRICTLY IN ACCORDANCE WITH THE WIRING DIAGRAM LOCATED INSIDE OF WIRE COVER OF THE OUTDOOR UNIT .

2. Unscrew the electrical wiring cover and remove it.
3. Unscrew the cable clamp below the terminal block and place it to the side.
4. Connect the wire according to the wiring diagram, and firmly screw the u-lug of each wire to its corresponding terminal.
5. After checking to make sure every connection is secure, loop the wires around to prevent rain water from flowing into the terminal.
6. Using the cable clamp, fasten the cable to the unit. Screw the cable clamp down tightly.
7. Insulate unused wires with PVC electrical tape. Arrange them so that they do not touch any electrical or metal parts.
8. Replace the wire cover on the side of the unit, and screw it in place.

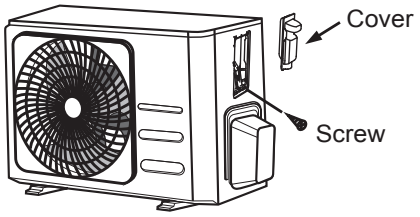

In North America

1. Remove the wire cover from the unit by loosening the 3 screws.
2. Dismount caps on the conduit panel.
3. Temperarily mount the conduit tubes(not included) on the conduit panel.
4. Properly connect both the power supply and low voltage lines to the corresponding terminals on the terminal block.
5. Ground the unit in accordance with local codes.
6. Be sure to size each wire allowing several inches longer than the required length for wiring.
7. Use lock nuts to secure the conduit tubes.

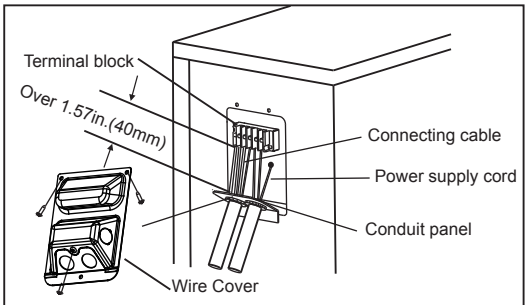

Please select the appropriate through-hole according to the diameter of the wire.

Refrigerant Piping Connection

When connecting refrigerant piping, **do not** let substances or gases other than the specified refrigerant enter the unit. The presence of other gases or substances will lower the unit's capacity, and can cause abnormally high pressure in the refrigeration cycle. This can cause explosion and injury.

Note on Pipe Length

The length of refrigerant piping will affect the performance and energy efficiency of the unit. Nominal efficiency is tested on units with a pipe length of 5 meters (16.5ft)(In North America, the standard pipe length is 7.5m (25'). A minimum pipe run of 3 metres is required to minimise vibration & excessive noise. In special tropical area, for the R290 refrigerant models, no refrigerant can be added and the maximum length of refrigerant pipe should not exceed 10 meters(32.8ft).

Refer to the table below for specifications on the maximum length and drop height of piping.

Maximum Length and Drop Height of Refrigerant Piping per Unit Model

Model	Capacity (BTU/h)	Max. Length (m)	Max. Drop Height (m)
R410A,R32 Inverter Split Air Conditioner	< 15,000	25 (82ft)	10 (33ft)
	≥ 15,000 and < 24,000	30 (98.5ft)	20 (66ft)
	≥ 24,000 and < 36,000	50 (164ft)	25 (82ft)
R22 Fixed-speed Split Air Conditioner	< 18,000	10 (33ft)	5 (16ft)
	≥ 18,000 and < 21,000	15 (49ft)	8(26ft)
	≥ 21,000 and < 35,000	20 (66ft)	10(33ft)
R410A, R32 Fixed-speed Split Air Conditioner	< 18,000	20 (66ft)	8(26ft)
	≥ 18,000 and < 36,000	25 (82ft)	10(33ft)

Connection Instructions – Refrigerant Piping

Step 1: Cut pipes

When preparing refrigerant pipes, take extra care to cut and flare them properly. This will ensure efficient operation and minimize the need for future maintenance.

1. Measure the distance between the indoor and outdoor units.
2. Using a pipe cutter, cut the pipe a little longer than the measured distance.
3. Make sure that the pipe is cut at a perfect 90° angle.

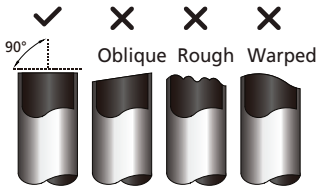

DO NOT DEFORM PIPE WHILE CUTTING

Be extra careful not to damage, dent, or deform the pipe while cutting. This will drastically reduce the heating efficiency of the unit.

Step 2: Remove burrs

Burrs can affect the air-tight seal of refrigerant piping connection. They must be completely removed.

1. Hold the pipe at a downward angle to prevent burrs from falling into the pipe.
2. Using a reamer or deburring tool, remove all burrs from the cut section of the pipe.

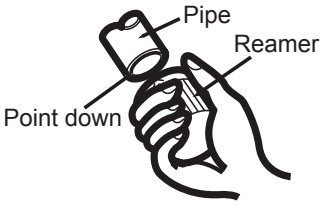

Step 3: Flare pipe ends

Proper flaring is essential to achieve an airtight seal.

1. After removing burrs from cut pipe, seal the ends with PVC tape to prevent foreign materials from entering the pipe.
2. Sheath the pipe with insulating material.
3. Place flare nuts on both ends of pipe. Make sure they are facing in the right direction, because you can't put them on or change their direction after flaring.

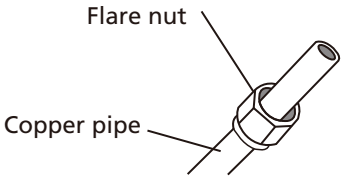

4. Remove PVC tape from ends of pipe when ready to perform flaring work.
5. Clamp flare form on the end of the pipe. The end of the pipe must extend beyond the edge of the flare form in accordance with the dimensions shown in the table below.

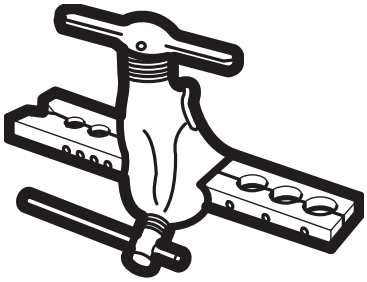

PIPING EXTENSION BEYOND FLARE FORM

Outer Diameter of Pipe (mm)	A (mm)	
	Min.	Max.
Ø 6.35 (Ø 0.25")	0.7 (0.0275")	1.3 (0.05")
Ø 9.52 (Ø 0.375")	1.0 (0.04")	1.6 (0.063")
Ø12.7 (Ø 0.5")	1.0 (0.04")	1.8 (0.07")
Ø 16 (Ø 0.63")	2.0 (0.078")	2.2 (0.086")
Ø 19 (Ø 0.75")	2.0 (0.078")	2.4 (0.094")

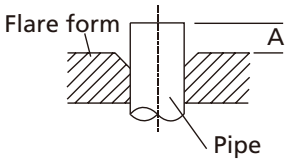

6. Place flaring tool onto the form.
7. Turn the handle of the flaring tool clockwise until the pipe is fully flared.
8. Remove the flaring tool and flare form, then inspect the end of the pipe for cracks and even flaring.

Step 4: Connect pipes

When connecting refrigerant pipes, be careful not to use excessive torque or to deform the piping in any way. You should first connect the low-pressure pipe, then the high-pressure pipe.

MINIMUM BEND RADIUS

When bending connective refrigerant piping, the minimum bending radius is 10cm.

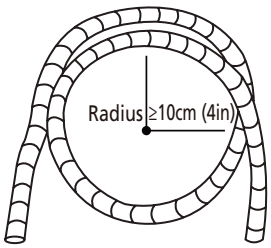

Instructions for Connecting Piping to Indoor Unit

1. Align the center of the two pipes that you will connect.

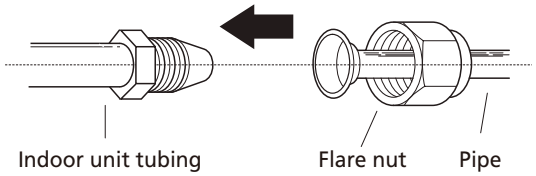

2. Tighten the flare nut as tightly as possible by hand.
3. Using a spanner, grip the nut on the unit tubing.
4. While firmly gripping the nut on the unit tubing, use a torque wrench to tighten the flare nut according to the torque values in the **Torque Requirements** table below. Loosen the flaring nut slightly, then tighten again.

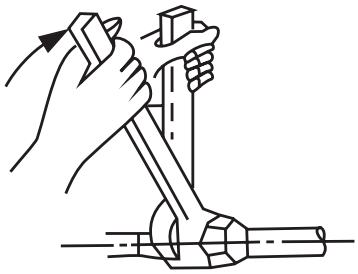

TORQUE REQUIREMENTS

Outer Diameter of Pipe (mm)	Tightening Torque (N•m)	Flare dimension(B) (mm)	Flare shape
Ø 6.35 (Ø 0.25”)	18~20(180~200kgf.cm)	8.4~8.7 (0.33~0.34”)	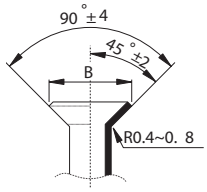
Ø 9.52 (Ø 0.375”)	32~39(320~390kgf.cm)	13.2~13.5 (0.52~0.53”)	
Ø 12.7 (Ø 0.5”)	49~59(490~590kgf.cm)	16.2~16.5 (0.64~0.65”)	
Ø 16 (Ø 0.63”)	57~71(570~710kgf.cm)	19.2~19.7 (0.76~0.78”)	
Ø 19 (Ø 0.75”)	67~101(670~1010kgf.cm)	23.2~23.7 (0.91~0.93”)	

DO NOT USE EXCESSIVE TORQUE

Excessive force can break the nut or damage the refrigerant piping. You must not exceed torque requirements shown in the table above.

Instructions for Connecting Piping to Outdoor Unit

1. Unscrew the cover from the packed valve on the side of the outdoor unit.
2. Remove protective caps from ends of valves.
3. Align flared pipe end with each valve, and tighten the flare nut as tightly as possible by hand.
4. Using a spanner, grip the body of the valve. Do not grip the nut that seals the service valve.

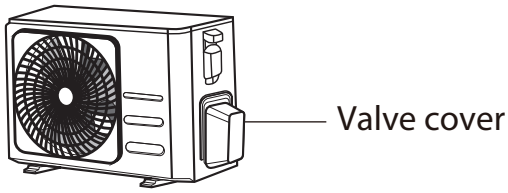

5. While firmly gripping the body of the valve, use a torque wrench to tighten the flare nut according to the correct torque values.
6. Loosen the flaring nut slightly, then tighten again.
7. Repeat Steps 3 to 6 for the remaining pipe.

USE SPANNER TO GRIP MAIN BODY OF VALVE

Torque from tightening the flare nut can snap off other parts of valve.

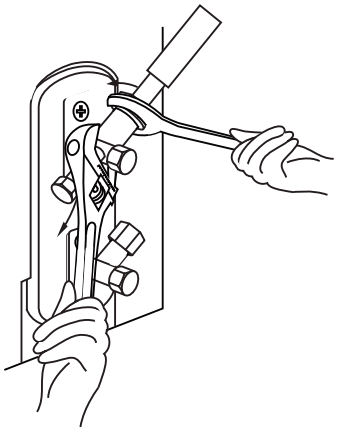

⚠ CAUTION

- Oil traps

  If the indoor unit is installed higher than the outdoor unit:

  -If oil flows back into the outdoor unit's compressor, this might cause liquid compression or deterioration of oil return. Oil traps in the rising gas piping can prevent this.

  An oil trap should be installed every 10m (32.8ft) of vertical suction line riser.

⚠ CAUTION

If the outdoor unit is installed higher than the indoor unit:

-It is recommended that vertical suction risers not be upsized. Proper oil return to the compressor should be maintained with suction gas velocity. If velocities drop below7.62m/s (1500fpm (feet per minute)), oil return will be decreased. An oil trap should be installed every 6m(20ft) of vertical suction line riser.

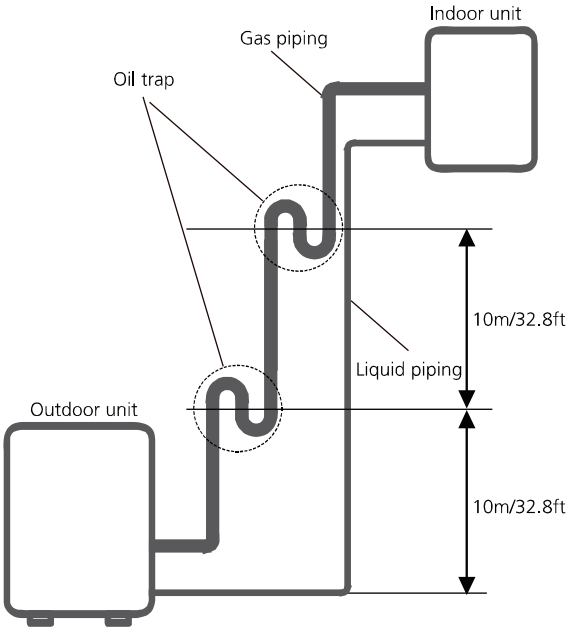

The indoor unit is installed higher than the outdoor unit

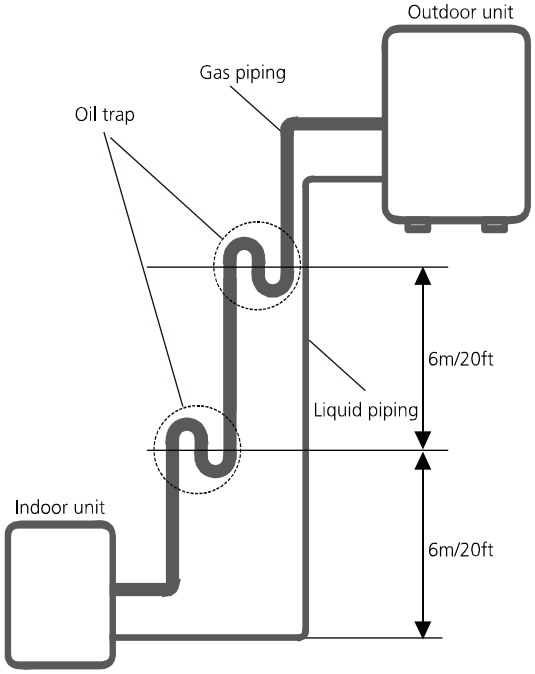

The outdoor unit is installed higher than the indoor unit

Air Evacuation

Preparations and Precautions

Air and foreign matter in the refrigerant circuit can cause abnormal rises in pressure, which can damage the air conditioner, reduce its efficiency, and cause injury. Use a vacuum pump and manifold gauge to evacuate the refrigerant circuit, removing any non-condensable gas and moisture from the system.

Evacuation should be performed upon initial installation and when unit is relocated.

BEFORE PERFORMING EVACUATION

- ☑ Check to make sure the connective pipes between the indoor and outdoor units are connected properly .
- ☑ Check to make sure all wiring is connected properly.

Evacuation Instructions

1. Connect the charge hose of the manifold gauge to service port on the outdoor unit's low pressure valve.
2. Connect another charge hose from the manifold gauge to the vacuum pump.
3. Open the Low Pressure side of the manifold gauge. Keep the High Pressure side closed.
4. Turn on the vacuum pump to evacuate the system.
5. Run the vacuum for at least 15 minutes, or until the Compound Meter reads -76cmHG (-10^5Pa).

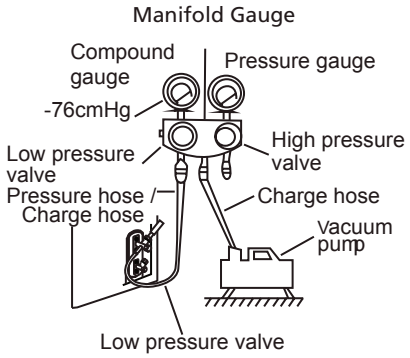

6. Close the Low Pressure side of the manifold gauge, and turn off the vacuum pump.
7. Wait for 5 minutes, then check that there has been no change in system pressure.
8. If there is a change in system pressure, refer to Gas Leak Check section for information on how to check for leaks. If there is no change in system pressure, unscrew the cap
9. from the packed valve (high pressure valve). Insert hexagonal wrench into the packed valve (high pressure valve) and open the valve by turning the wrench in a 1/4 counterclockwise turn. Listen for gas to exit the system, then close the valve after 5 seconds.
10. Watch the Pressure Gauge for one minute to make sure that there is no change in pressure. The Pressure Gauge should read slightly higher than atmospheric pressure.
11. Remove the charge hose from the service port.

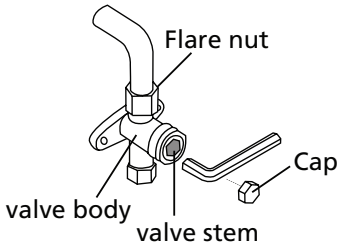

12. Using hexagonal wrench, fully open both the high pressure and low pressure valves.
13. Tighten valve caps on all three valves (service port, high pressure, low pressure) by hand. You may tighten it further using a torque wrench if needed.

! OPEN VALVE STEMS GENTLY

When opening valve stems, turn the hexagonal wrench until it hits against the stopper. Do not try to force the valve to open further.

Note on Adding Refrigerant

Some systems require additional charging depending on pipe lengths. The standard pipe length varies according to local regulations. For example, in North America, the standard pipe length is 7.5m (25′). In other areas, the standard pipe length is 5m (16′). The refrigerant should be charged from the service port on the outdoor unit's low pressure valve. The additional refrigerant to be charged can be calculated using the following formula:

ADDITIONAL REFRIGERANT PER PIPE LENGTH

Connective Pipe Length (m)	Air Purging Method	Additional Refrigerant	
⩽ Standard pipe length	Vacuum Pump	N/A	
> Standard pipe length	Vacuum Pump	Liquid Side: Ø 6.35 (ø 0.25″) **R32:** (Pipe length – standard length) x 12g/m (Pipe length – standard length) x 0.13oZ/ft **R290:** (Pipe length – standard length) x 10g/m (Pipe length – standard length) x 0.10oZ/ft **R410A:** (Pipe length – standard length) x 15g/m (Pipe length – standard length) x 0.16oZ/ft **R22:** (Pipe length – standard length) x 20g/m (Pipe length – standard length) x 0.21oZ/ft	Liquid Side: Ø 9.52 (ø 0.375″) **R32:** (Pipe length – standard length) x 24g/m (Pipe length – standard length) x 0.26oZ/ft **R290:** (Pipe length – standard length) x 18g/m (Pipe length – standard length) x 0.19oZ/ft **R410A:** (Pipe length – standard length) x 30g/m (Pipe length – standard length) x 0.32oZ/ft **R22:** (Pipe length – standard length) x 40g/m (Pipe length – standard length) x 0.42oZ/ft

For R290 refrigerant unit, the total amount of refrigerant to be charged is no more than: 387g(<=9000Btu/h), 447g(>9000Btu/h and <=12000Btu/h), 547g(>12000Btu/h and <=18000Btu/h), 632g(>18000Btu/h and <=24000Btu/h).

⚠ **CAUTION** **DO NOT** mix refrigerant types.

Electrical and Gas Leak Checks

Before Test Run

Only perform test run after you have completed the following steps:

- **Electrical Safety Checks** – Confirm that the unit's electrical system is safe and operating properly
- **Gas Leak Checks** – Check all flare nut connections and confirm that the system is not leaking
- Confirm that gas and liquid (high and low pressure) valves are fully open

Electrical Safety Checks

After installation, confirm that all electrical wiring is installed in accordance with local and national regulations, and according to the Installation Manual.

BEFORE TEST RUN

Check Grounding Work

Measure grounding resistance by visual detection and with grounding resistance tester. Grounding resistance must be less than 0.1Ω.

Note: This may not be required for some locations in the US.

DURING TEST RUN

Check for Electrical Leakage

During the **Test Run,** use an electroprobe and multimeter to perform a comprehensive electrical leakage test.

If electrical leakage is detected, turn off the unit immediately and call a licensed electrician to find and resolve the cause of the leakage.

Note: This may not be required for some locations in the US.

⚠ WARNING – RISK OF ELECTRIC SHOCK

ALL WIRING MUST COMPLY WITH LOCAL AND NATIONAL ELECTRICAL CODES, AND MUST BE INSTALLED BY A LICENSED ELECTRICIAN.

Gas Leak Checks

There are two different methods to check for gas leaks.

Soap and Water Method

Using a soft brush, apply soapy water or liquid detergent to all pipe connection points on the indoor unit and outdoor unit. The presence of bubbles indicates a leak.

Leak Detector Method

If using leak detector, refer to the device's operation manual for proper usage instructions.

AFTER PERFORMING GAS LEAK CHECKS

After confirming that the all pipe connection points DO NOT leak, replace the valve cover on the outside unit.

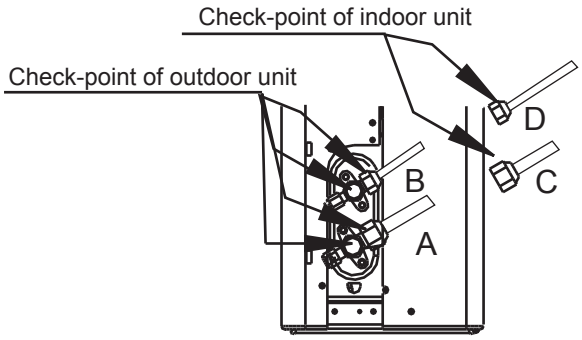

A: Low pressure stop valve
B: High pressure stop valve
C& D: Indoor unit flare nuts

Test Run

Test Run Instructions

You should perform the **Test Run** for at least 30 minutes.

1. Connect power to the unit.
2. Press the **ON/OFF** button on the remote controller to turn it on.
3. Press the **MODE** button to scroll through the following functions, one at a time:

- COOL – Select lowest possible temperature
- HEAT – Select highest possible temperature

4. Let each function run for 5 minutes, and perform the following checks:

List of Checks to Perform	PASS/FAIL	
No electrical leakage		
Unit is properly grounded		
All electrical terminals properly covered		
Indoor and outdoor units are solidly installed		
All pipe connection points do not leak	Outdoor (2):	Indoor (2):
Water drains properly from drain hose		
All piping is properly insulated		
Unit performs COOL function properly		
Unit performs HEAT function properly		
Indoor unit louvers rotate properly		
Indoor unit responds to remote controller		

DOUBLE-CHECK PIPE CONNECTIONS

During operation, the pressure of the refrigerant circuit will increase. This may reveal leaks that were not present during your initial leak check. Take time during the Test Run to double-check that all refrigerant pipe connection points do not have leaks. Refer to **Gas Leak Check** section for instructions.

5. After the Test Run is successfully completed, and you confirm that all checks points in List of Checks to Perform have PASSED, do the following:
   a. Using remote control, return unit to normal operating temperature.
   b. Using insulation tape, wrap the indoor refrigerant pipe connections that you left uncovered during the indoor unit installation process.

IF AMBIENT TEMPERATURE IS BELOW 17°C (62°F)

You can't use the remote controller to turn on the COOL function when the ambient temperature is below 17°C. In this instance, you can use the **MANUAL CONTROL** button to test the COOL function.

1. The **MANUAL CONTROL** button is located on the right-hand side panel of the unit.
2. Press the button 2 times to select the COOL function.
3. Perform Test Run as normal.

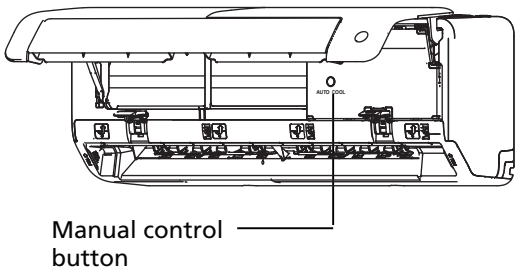

The design and specifications are subject to change without prior notice for product improvement. Consult with the sales agency or manufacturer for details. Any updates to the manual will be uploaded to the service website, please check for the latest version.