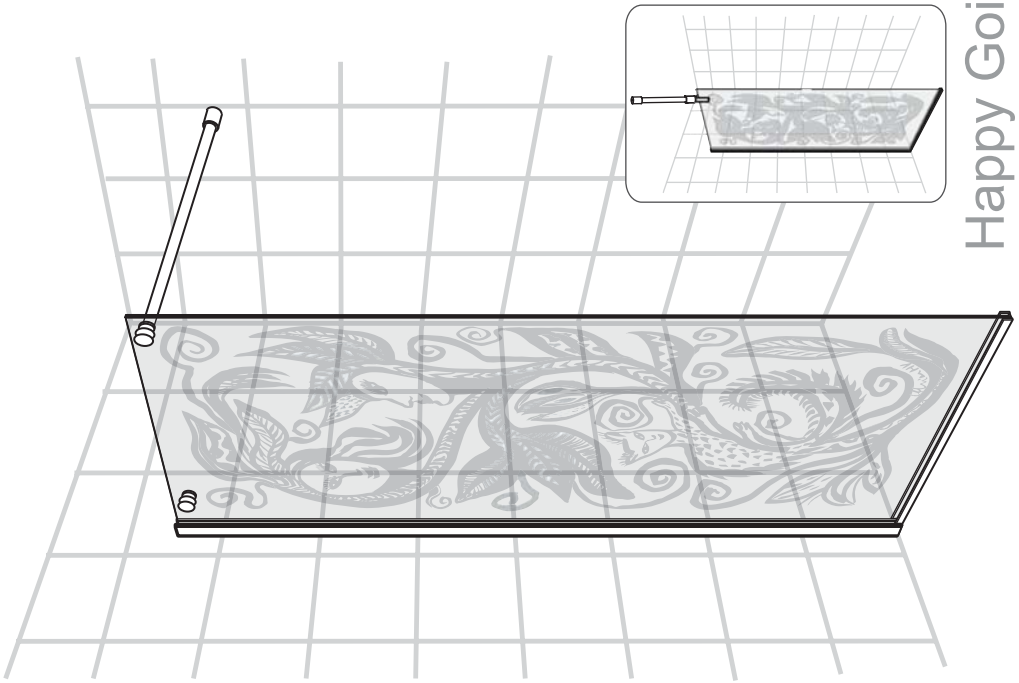

Happy Going

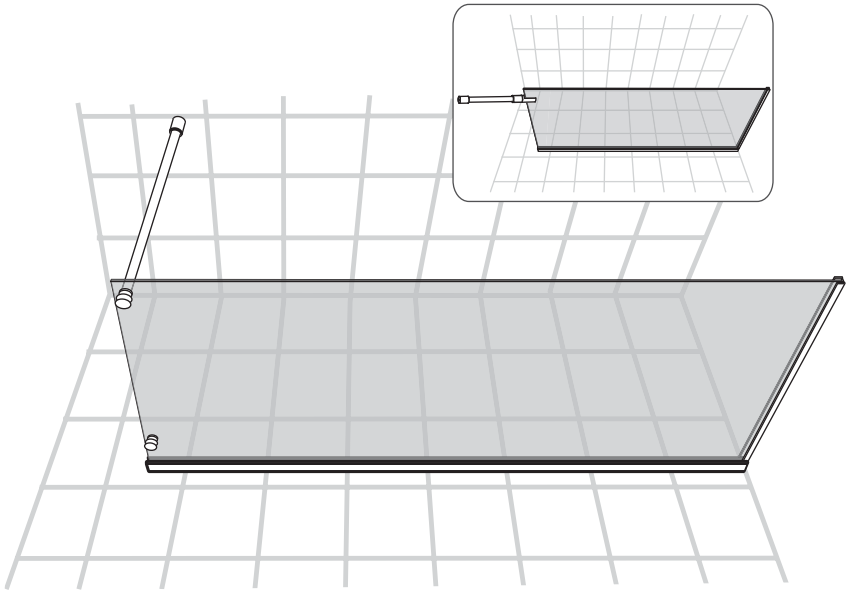

Frost DV

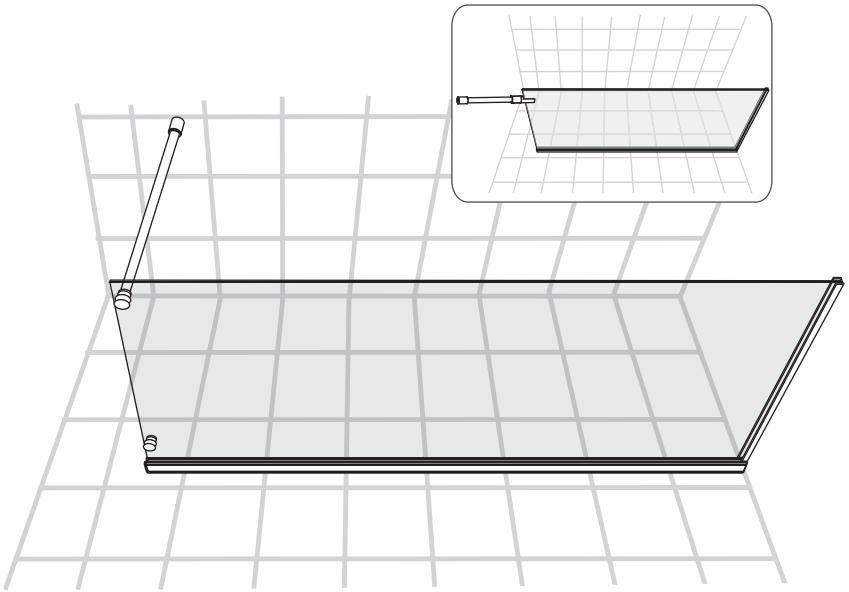

NORO®

Getting Start:

CE EN14428	This product fulfils the EN14428 standard		Goggles are recommended to protect the eyes
CE EN12150	All glass used are tempered security glass		Caution: Always Handle Glass With Care! Always protect the edges and corners of the glass when assembling.
	2 people are recommended to assemble this shower enclosure		Gloves are recommended to prevent slippery on glass

Tools Needed:

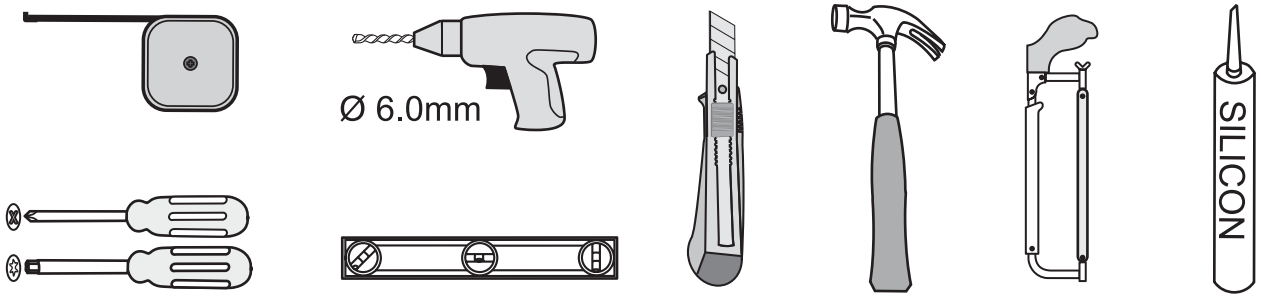

Accessories Bags:

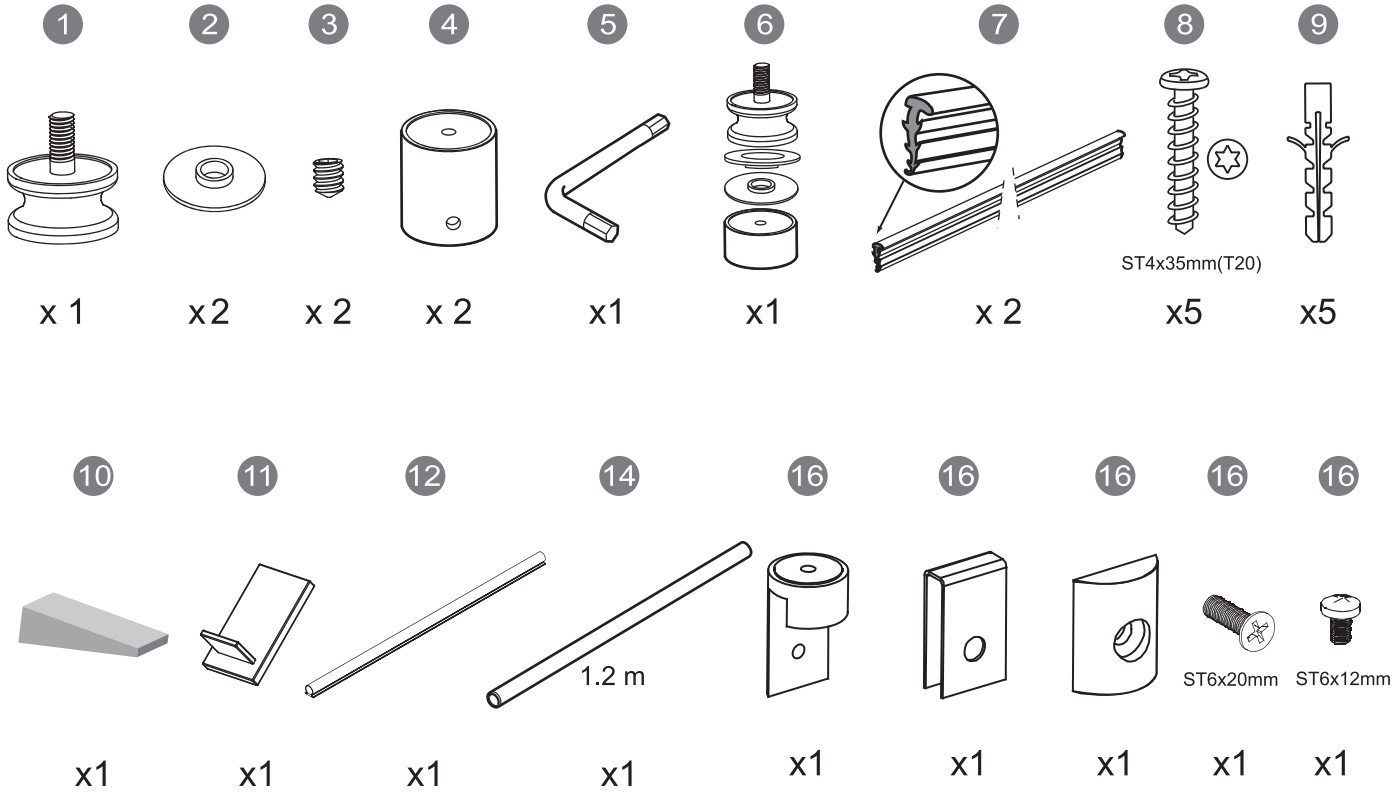

Exploded View:

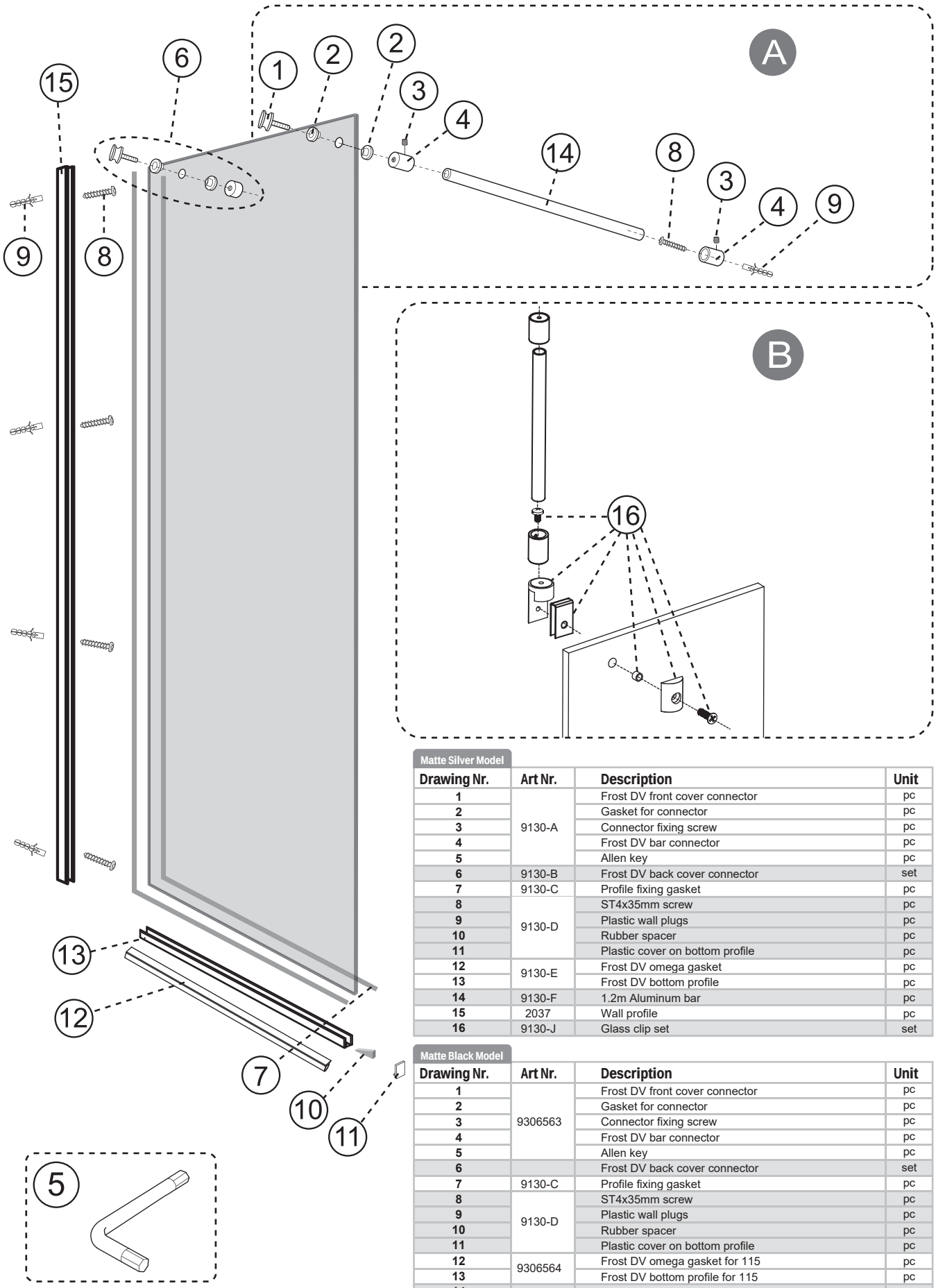

Matte Silver Model

Drawing Nr.	Art Nr.	Description	Unit
1	9130-A	Frost DV front cover connector	pc
2		Gasket for connector	pc
3		Connector fixing screw	pc
4		Frost DV bar connector	pc
5		Allen key	pc
6	9130-B	Frost DV back cover connector	set
7	9130-C	Profile fixing gasket	pc
8	9130-D	ST4x35mm screw	pc
9		Plastic wall plugs	pc
10		Rubber spacer	pc
11		Plastic cover on bottom profile	pc
12	9130-E	Frost DV omega gasket	pc
13		Frost DV bottom profile	pc
14	9130-F	1.2m Aluminum bar	pc
15	2037	Wall profile	pc
16	9130-J	Glass clip set	set

Matte Black Model

Drawing Nr.	Art Nr.	Description	Unit
1	9306563	Frost DV front cover connector	pc
2		Gasket for connector	pc
3		Connector fixing screw	pc
4		Frost DV bar connector	pc
5		Allen key	pc
6		Frost DV back cover connector	set
7	9130-C	Profile fixing gasket	pc
8	9130-D	ST4x35mm screw	pc
9		Plastic wall plugs	pc
10		Rubber spacer	pc
11		Plastic cover on bottom profile	pc
12	9306564	Frost DV omega gasket for 115	pc
13		Frost DV bottom profile for 115	pc
14	9306565	1.2m Aluminum bar	pc
15	302049	Wall profile	pc
16	9130-J	Glass clip set	set

Measurement:

Model	A	B
70	651mm	700mm
80	751mm	800mm
90	851mm	900mm

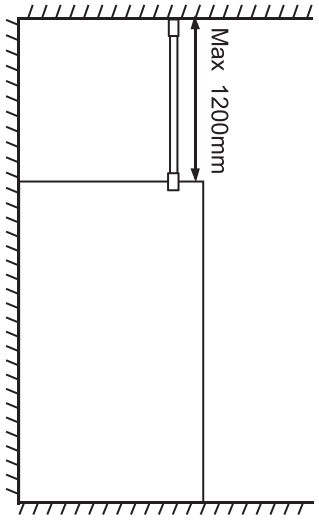

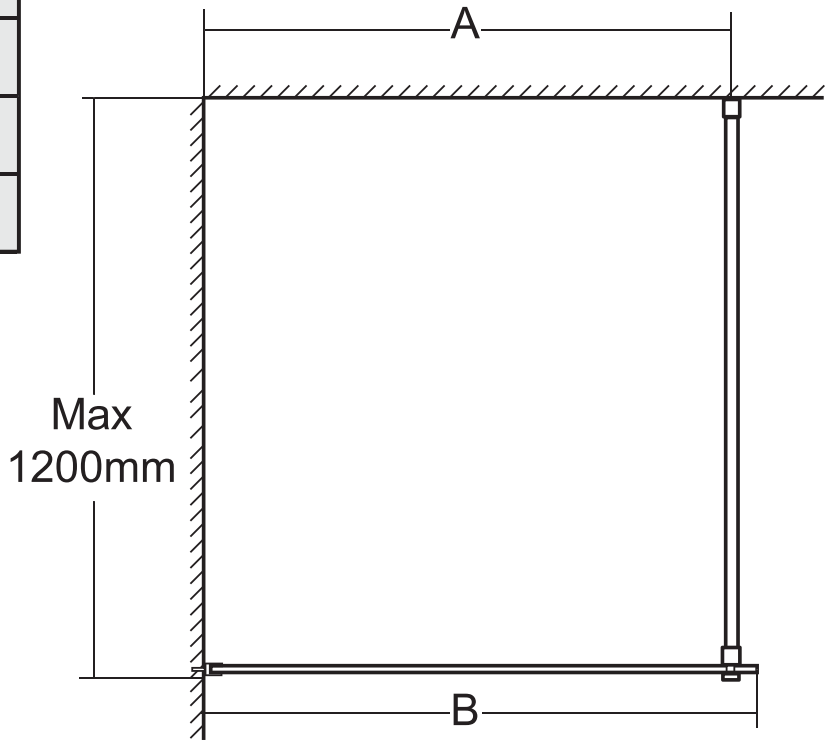

1

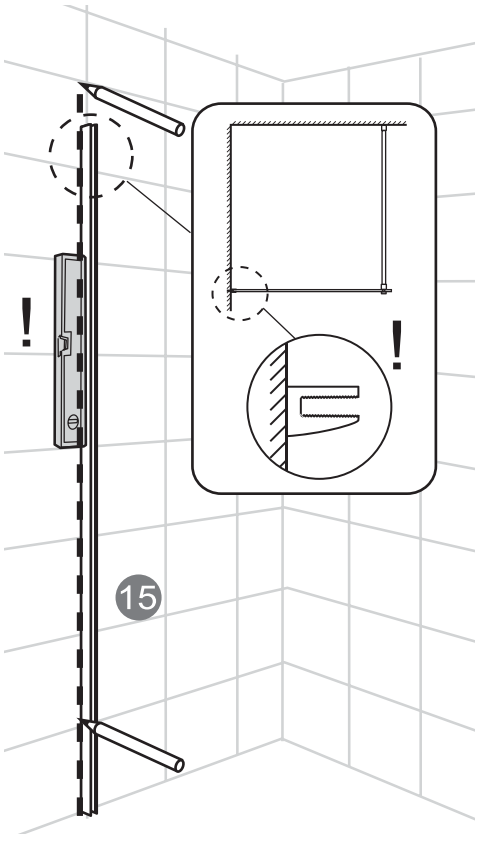

2

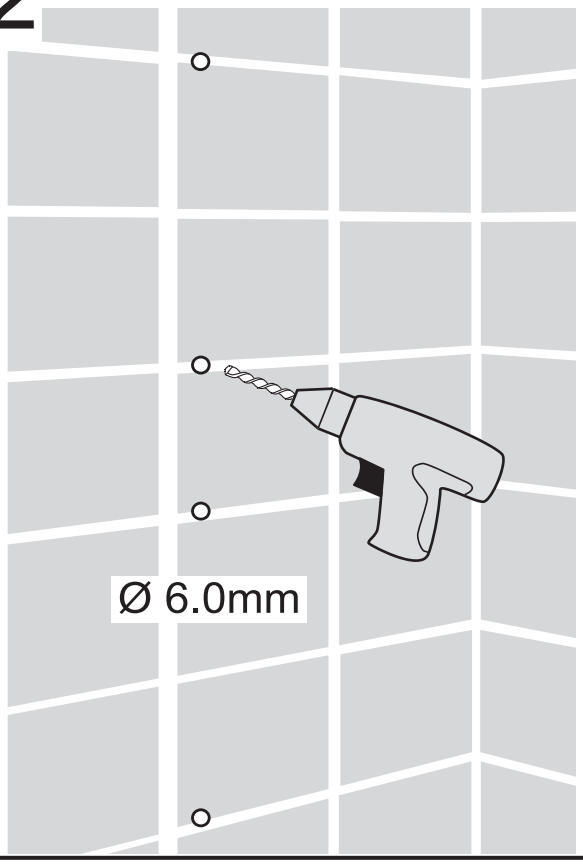

3

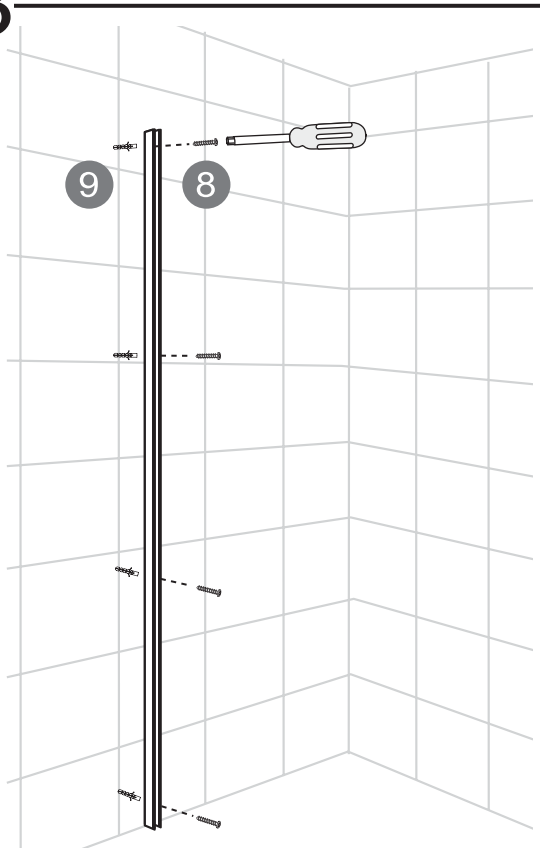

4

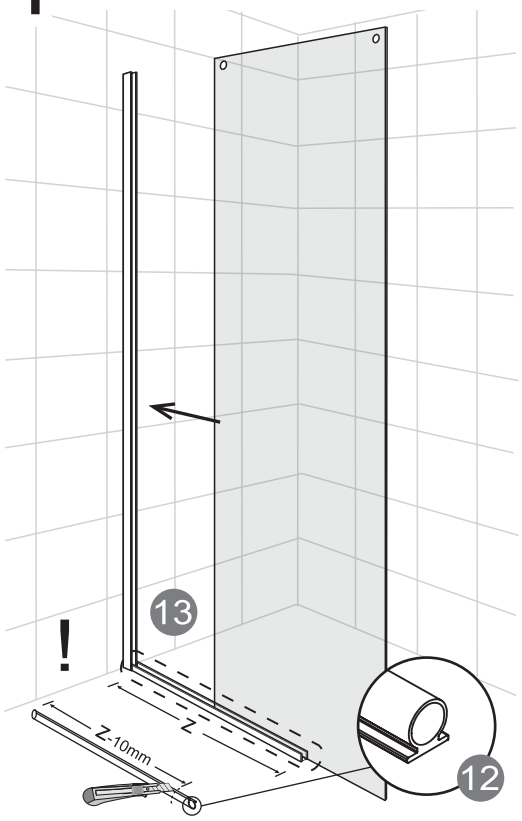

5

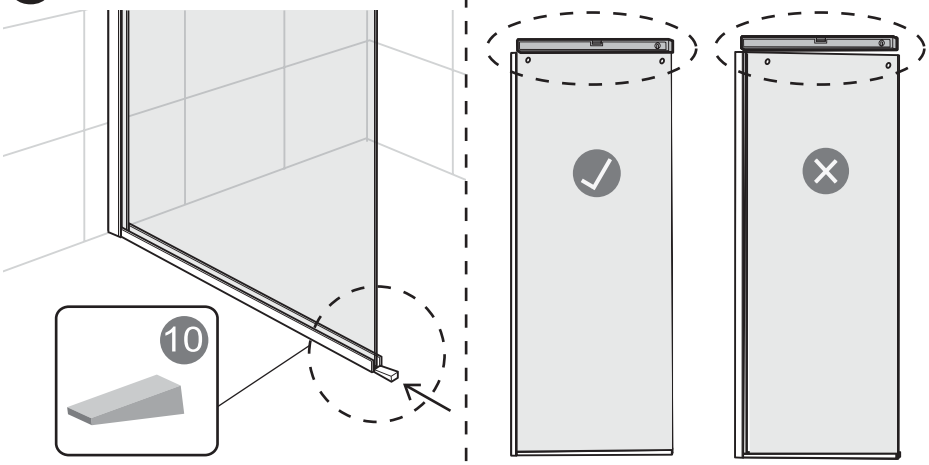

6

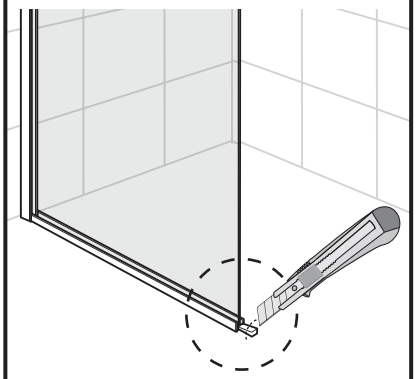

7

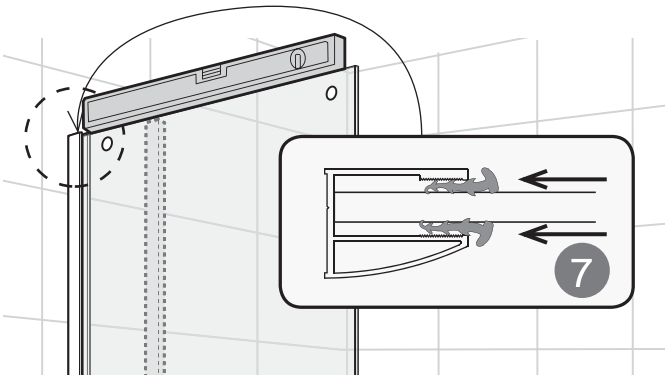

8

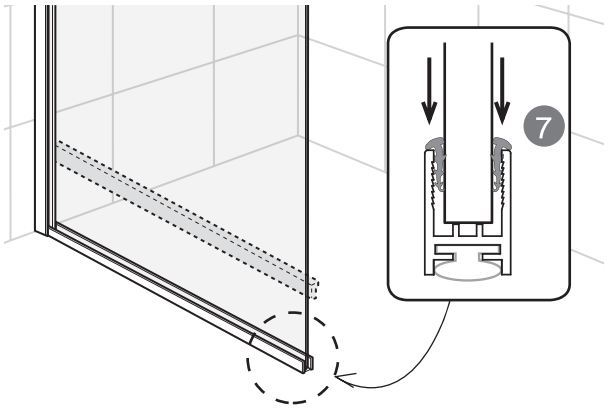

9A

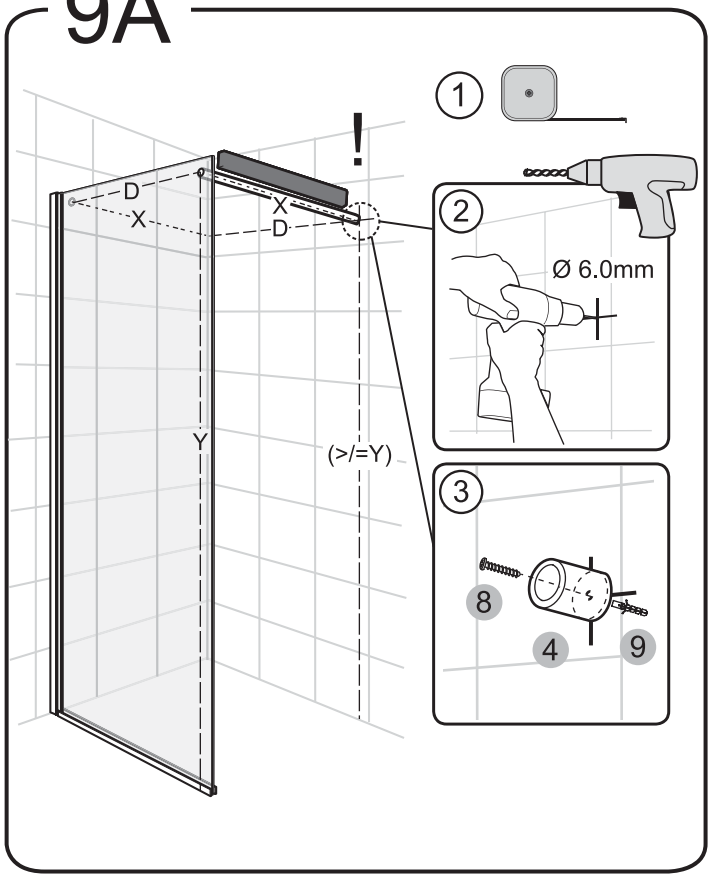

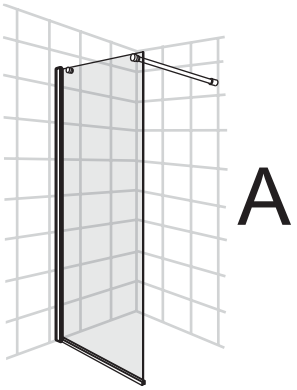

10A

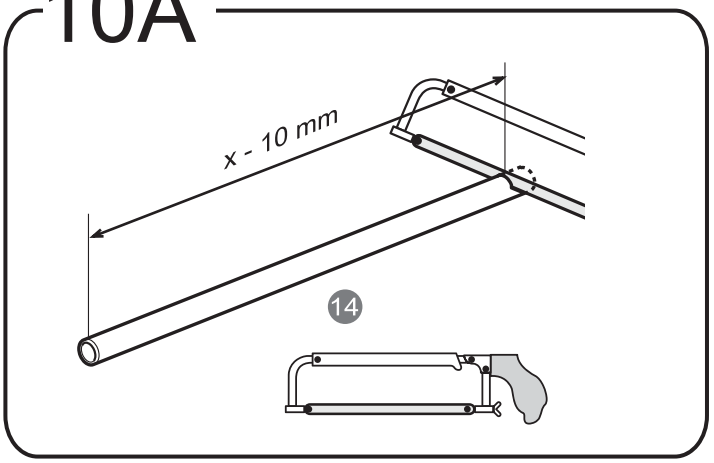

11A

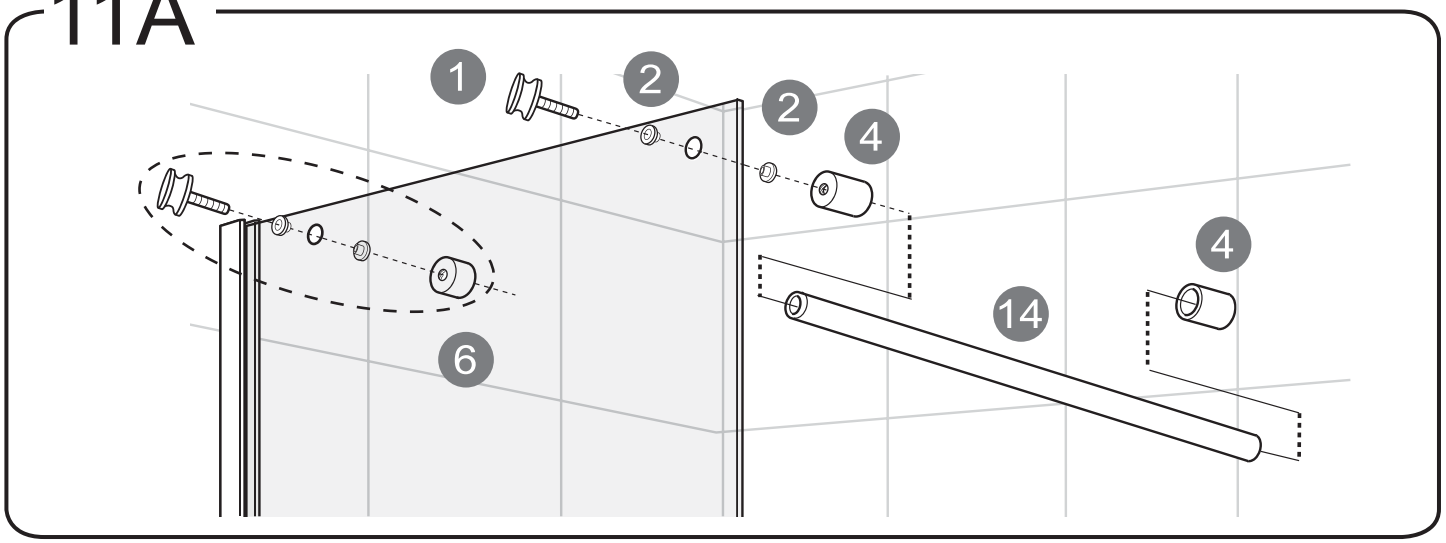

12A

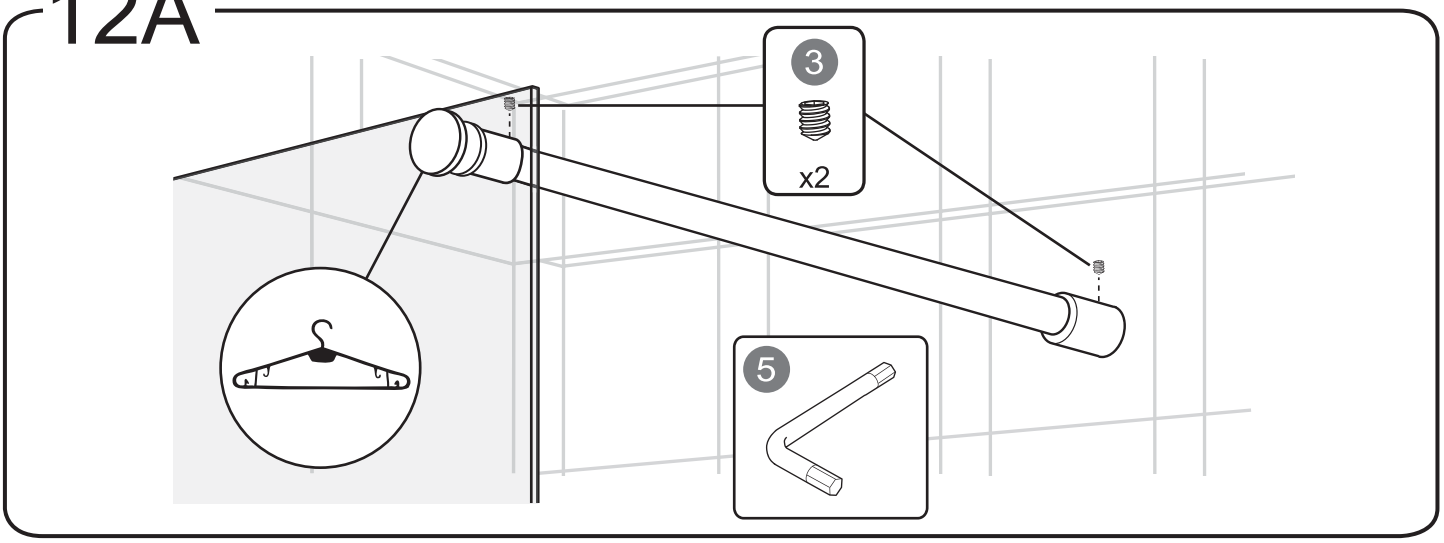

9B

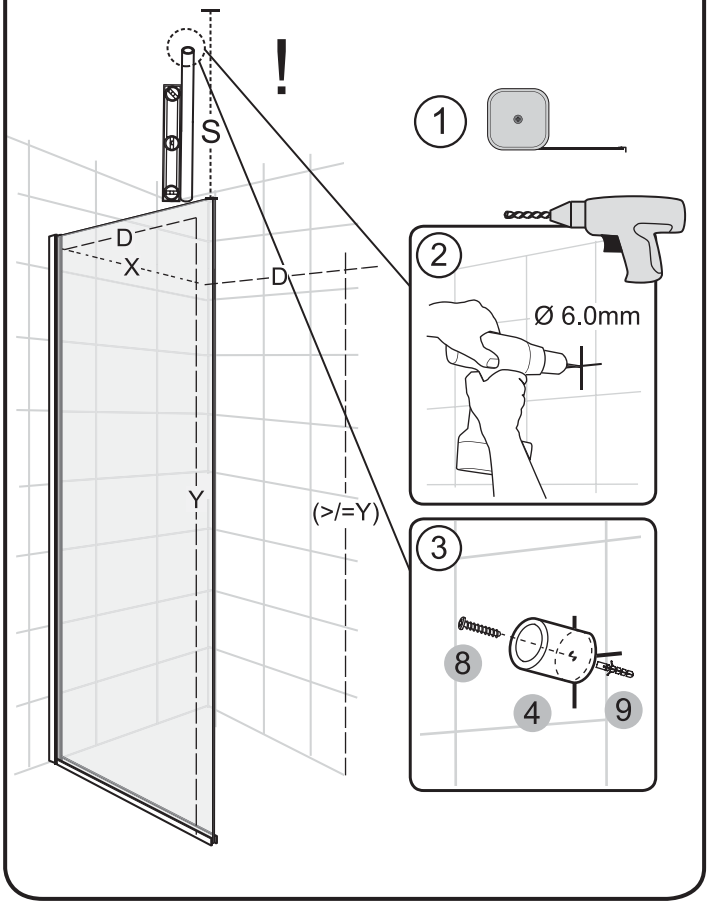

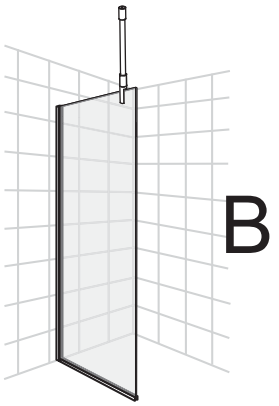

10B

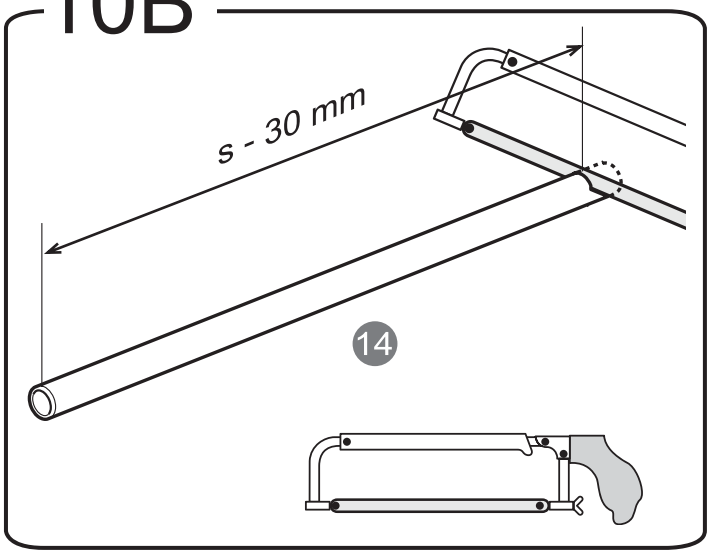

11B

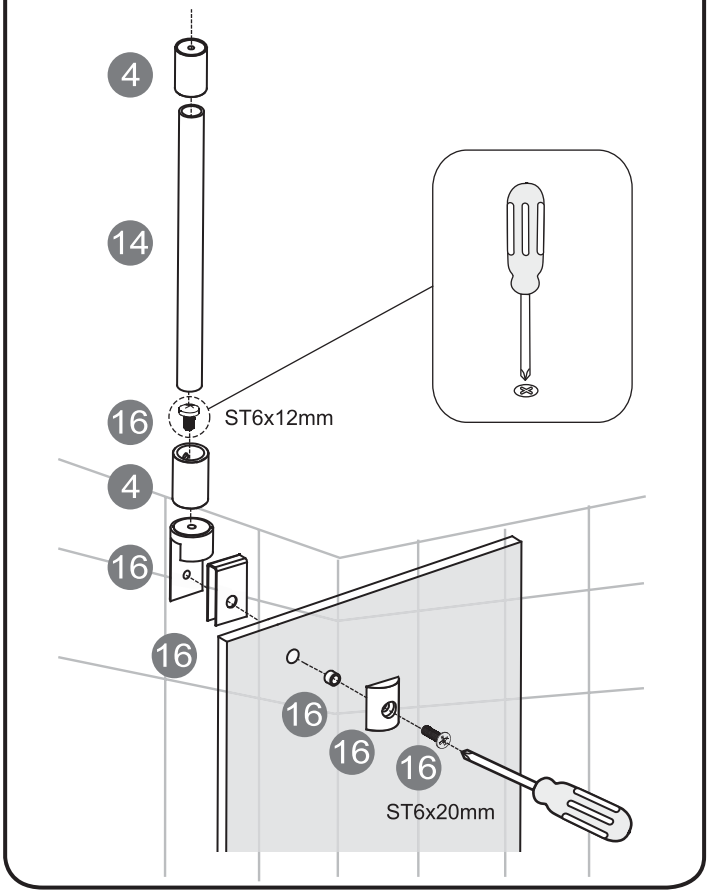

12B

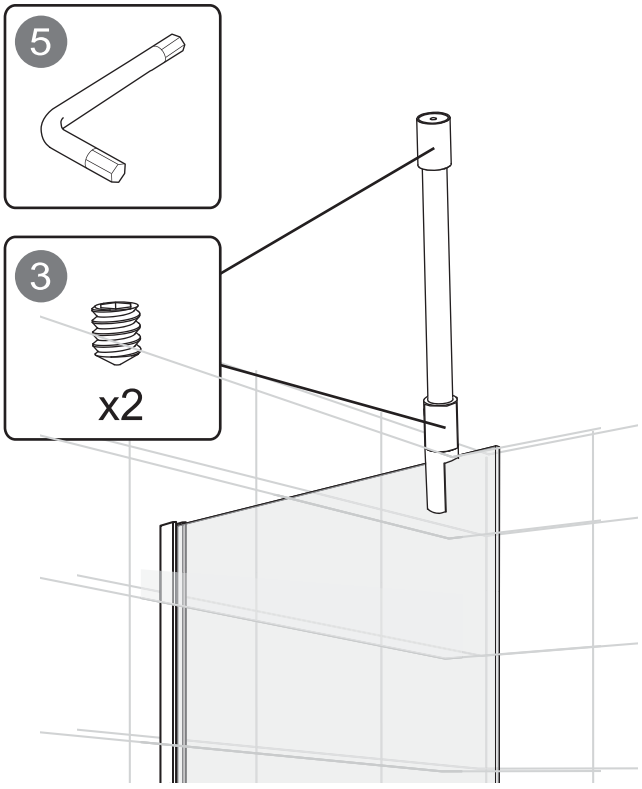

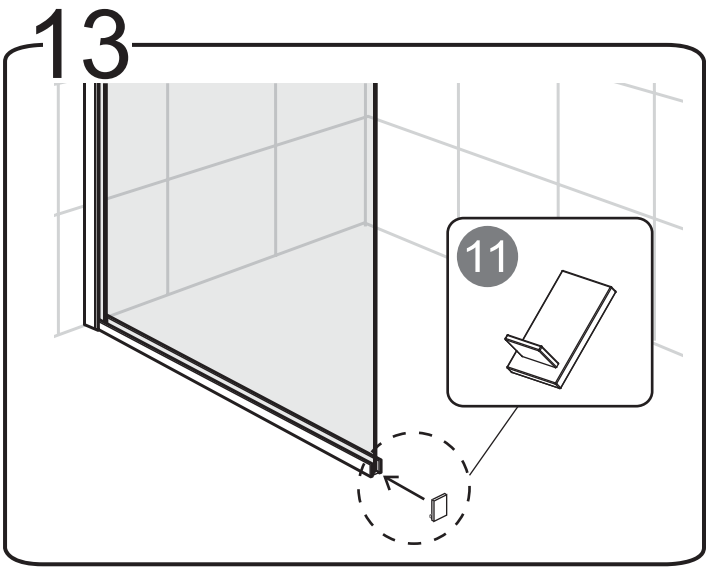

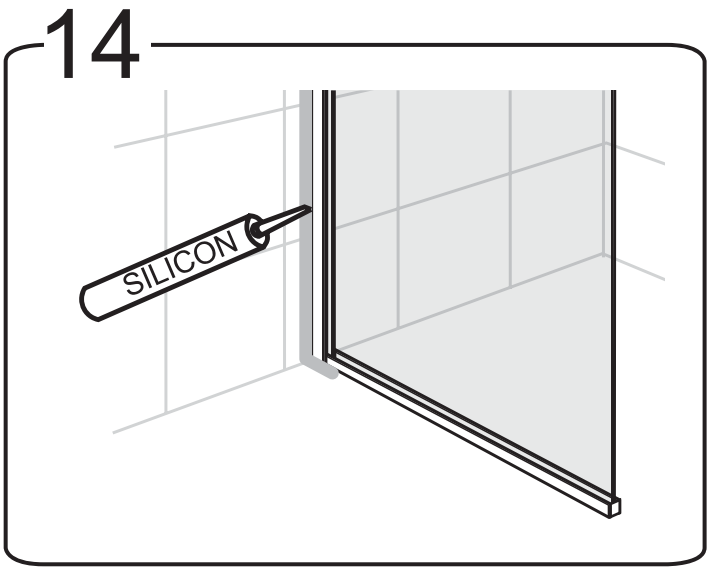

A

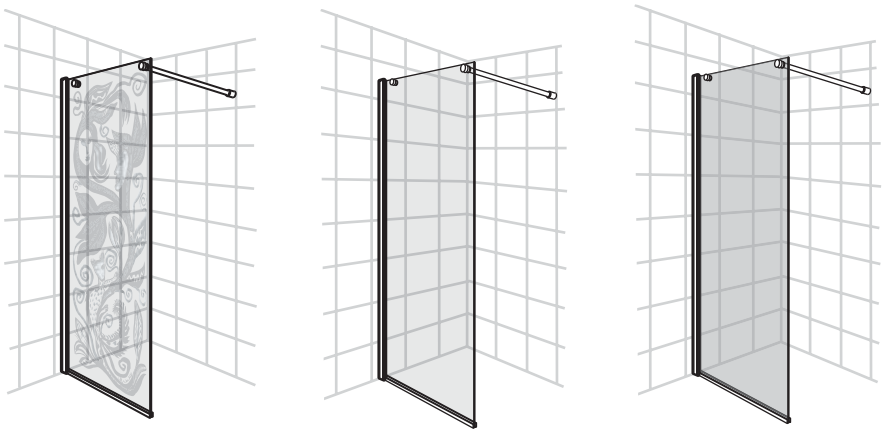

B

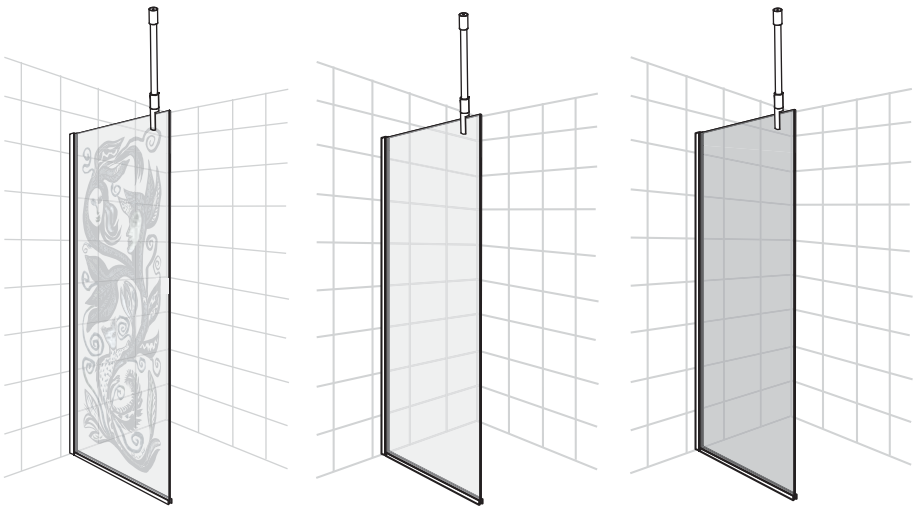

Frost DV

035 166430 SE
info@noro.se

020 7435740 FI
info@norokylpyhuone.fi

216 28860 NO
info@noro.se

702 52822 DK
info@noro.dk

Ver.013