PLAZA 2013

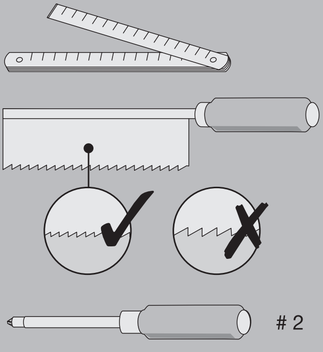

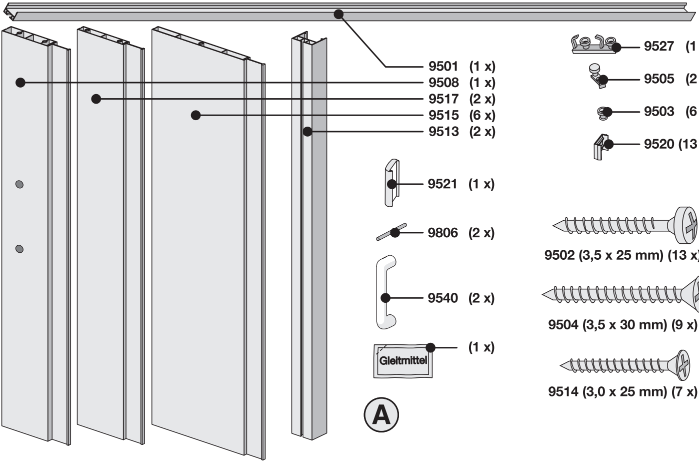
9501 (1 x)
9508 (1 x)
9517 (2 x)
9515 (6 x)
9513 (2 x)
9527 (1 x)
9505 (2 x)
9503 (6 x)
9520 (13 x)
9521 (1 x)
9806 (2 x)
9540 (2 x)
Gleitmittel
(1 x)
9502 (3,5 x 25 mm) (13 x)
9504 (3,5 x 30 mm) (9 x)
9514 (3,0 x 25 mm) (7 x)
A

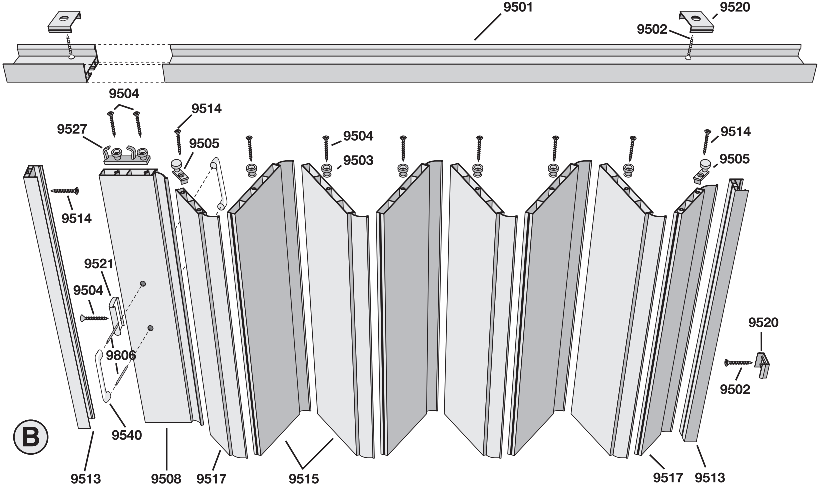
9501
9520
9502
9504
9514
9527
9505
9504
9503
9514
9505
9514
9521
9504
9806
9540
9520
9502
B
9513
9508
9517
9515
9517
9513

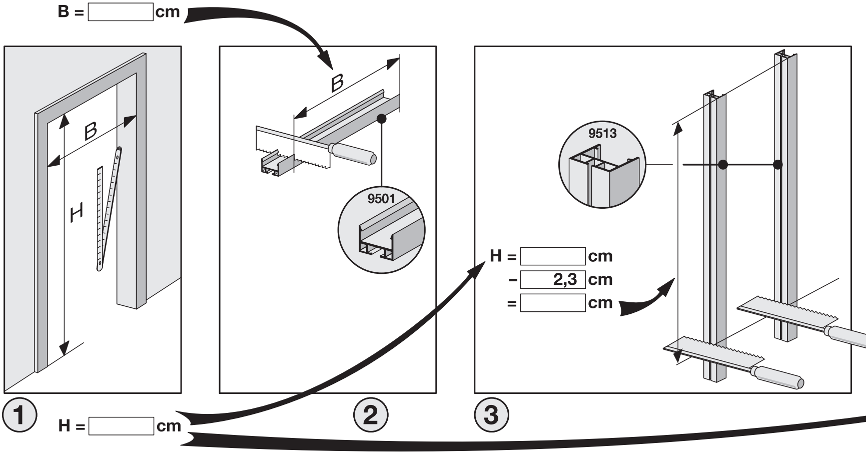
B = ☐ cm
B
H
B
9501
9513
H = ☐ cm
– 2,3 cm
= ☐ cm
①
②
③
H = ☐ cm

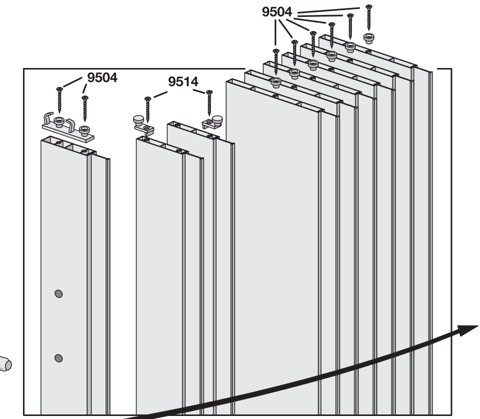
9504
9504
9514

④

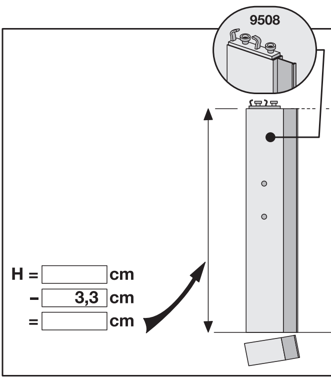

H = ______ cm

– 3,3 cm

= ______ cm

⑤

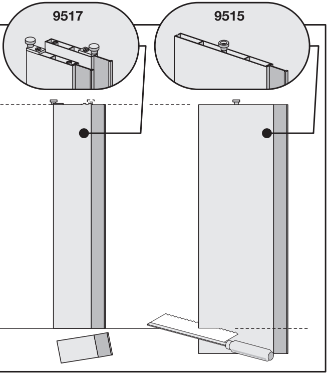

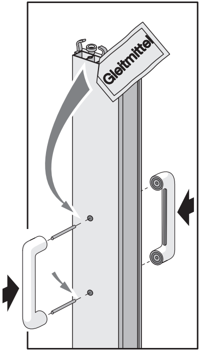
Gleitmittel

⑥

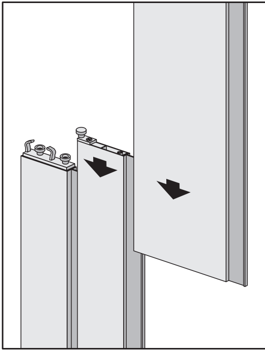

⑦

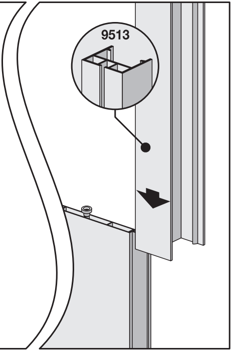

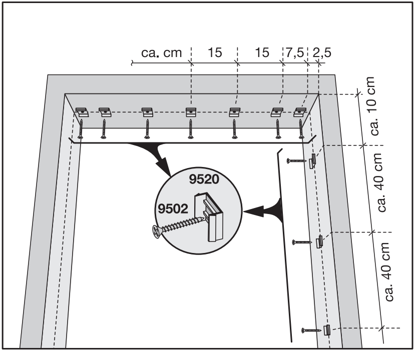
ca. cm
15
15
7,5
2,5
ca. 10 cm
ca. 40 cm
ca. 40 cm
9520
9502

⑧

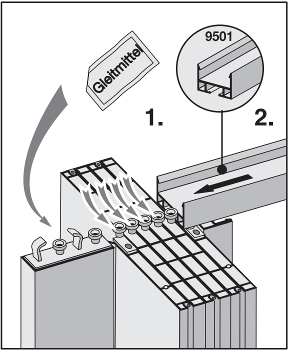
Gleitmittel
9501
1.
2.

9

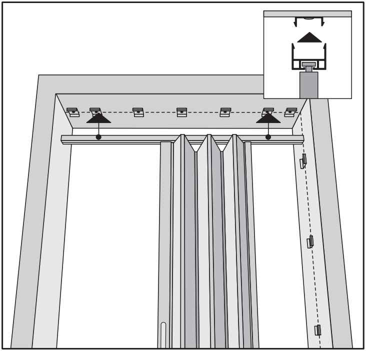

10

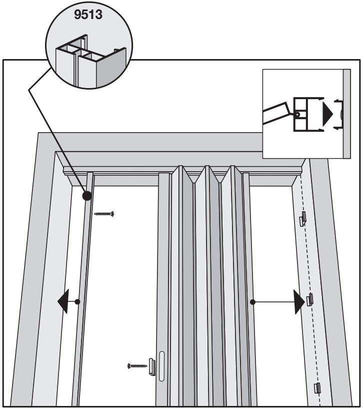

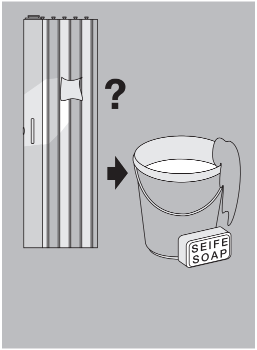⑪