Jungle Home

Jungle Gym®
BACKYARD PLAYGROUNDS

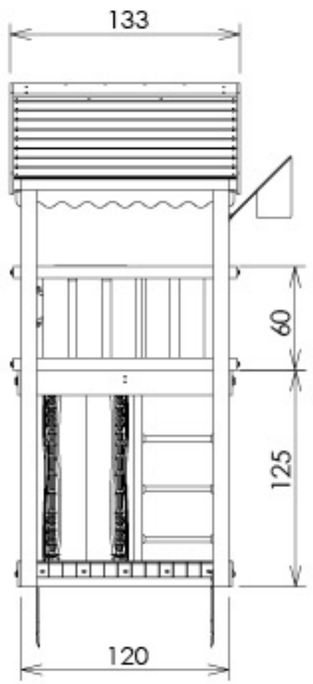

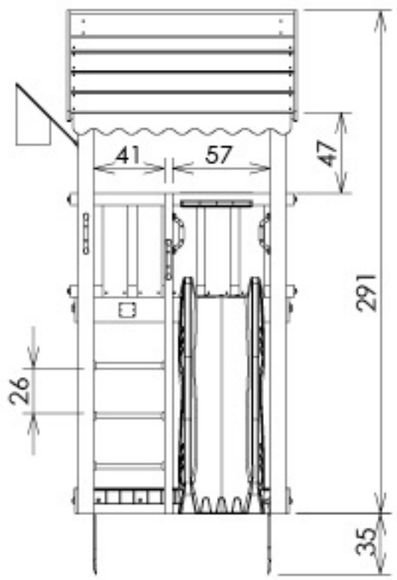

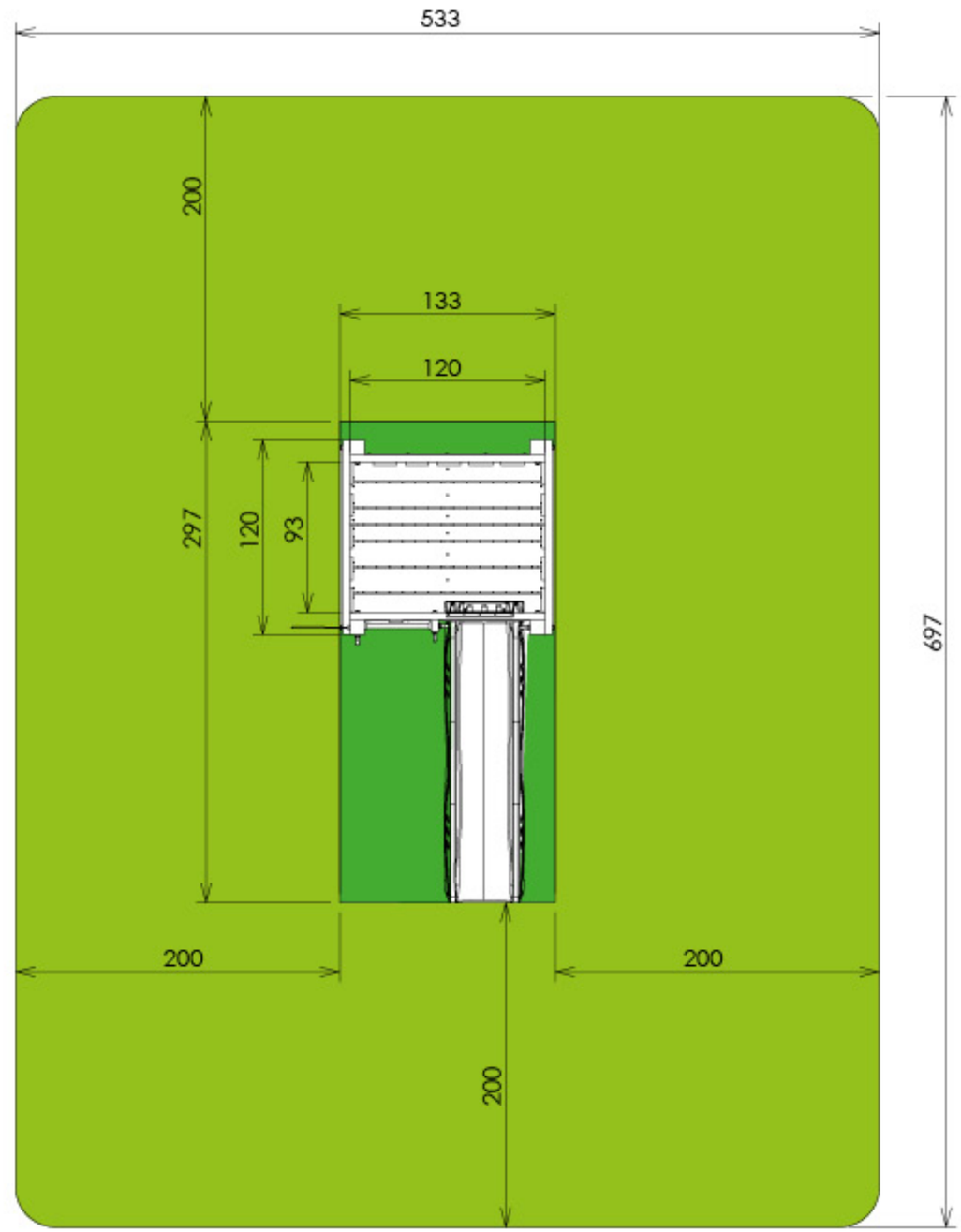

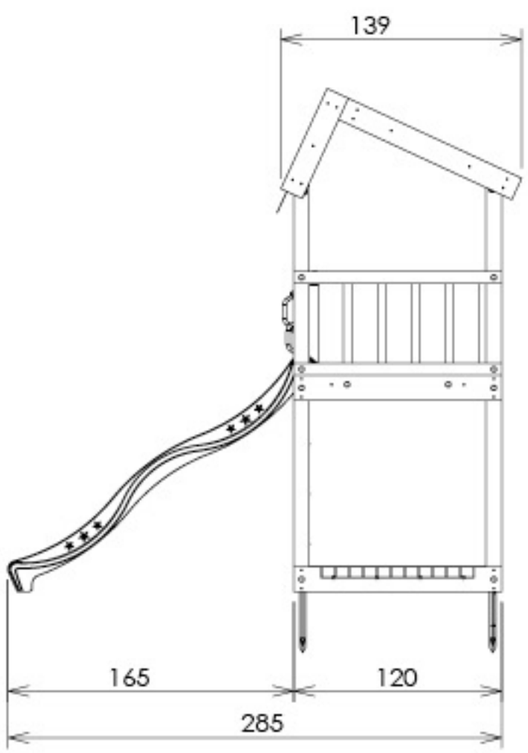

© 2016 Jungle Gym B.V.