DANSANI®

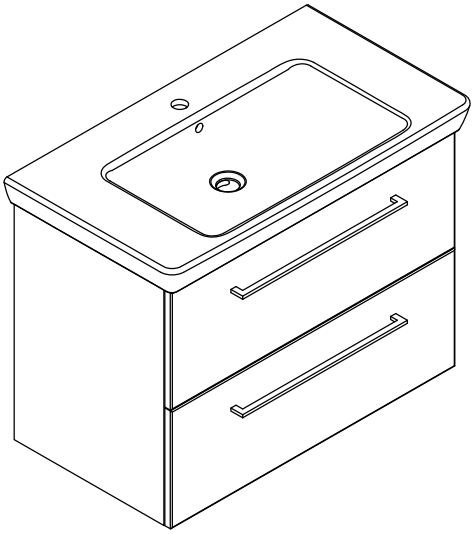

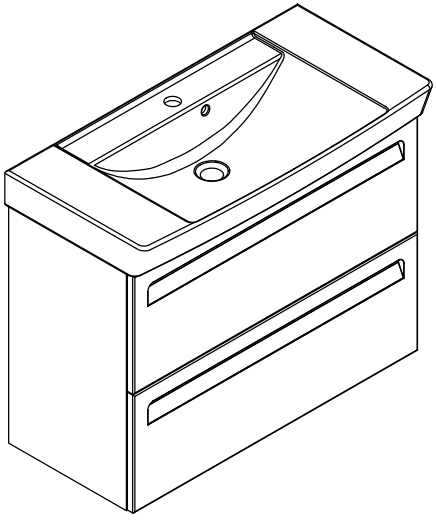

| 8x | 2x | 8x | 8x |
| --- | --- | --- | --- |
| | 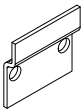 | | |
| 5-500 | 30010190 | 5,0-60SU | 195000000 |

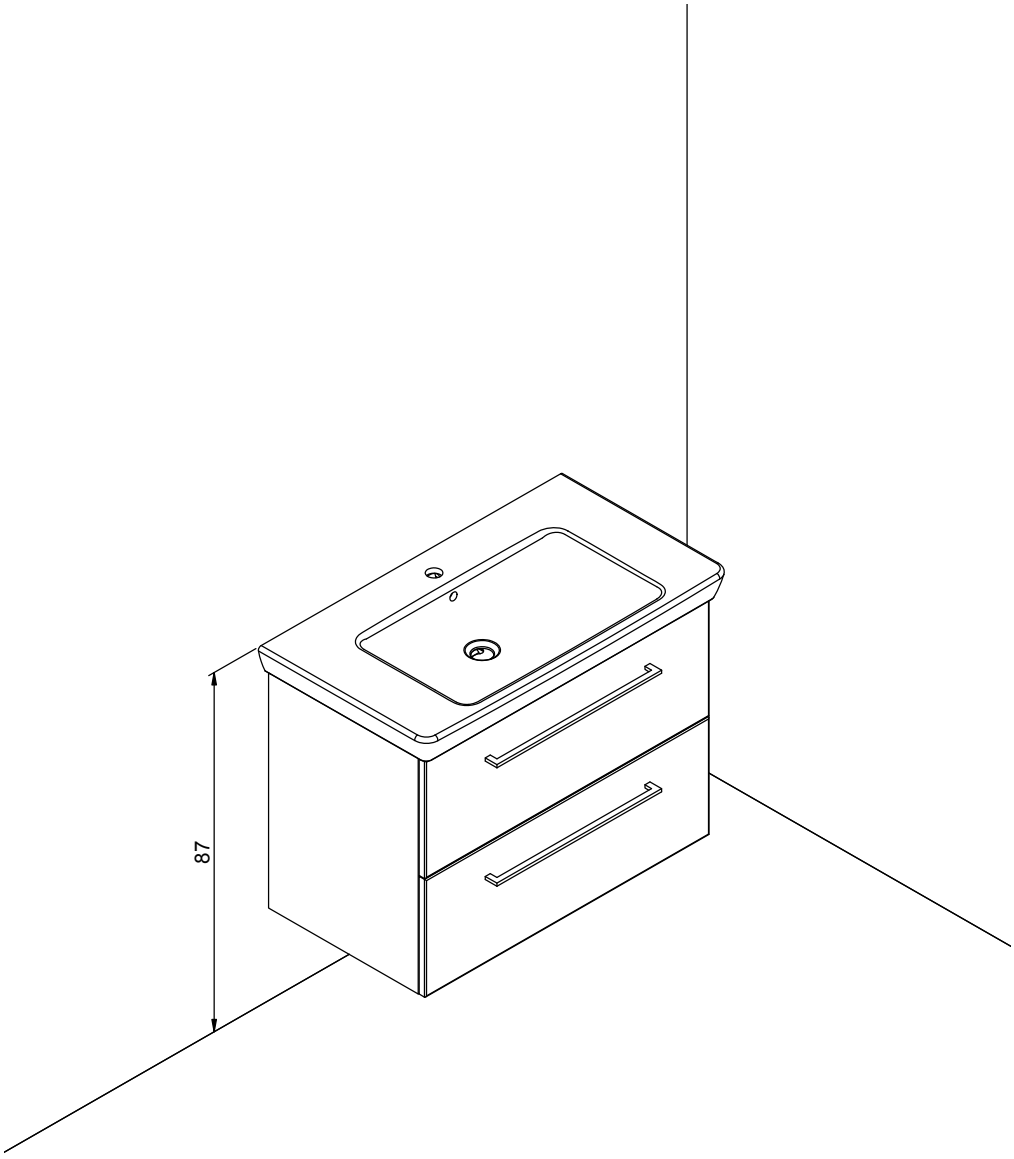

Lotto
X=71,3

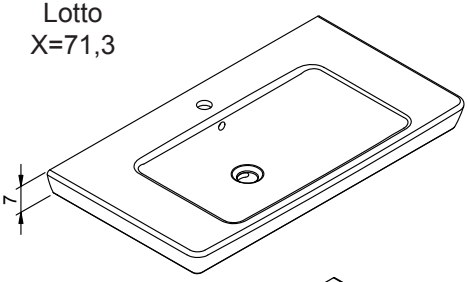


Capella
X=70,1

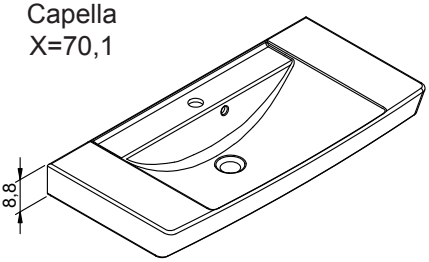


Ludo
X=71,3

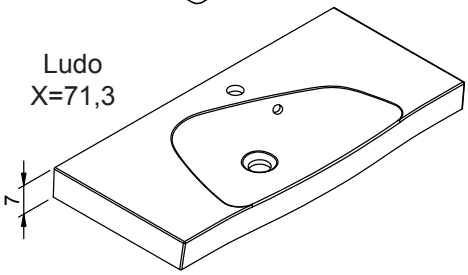


Uno
X=71,3

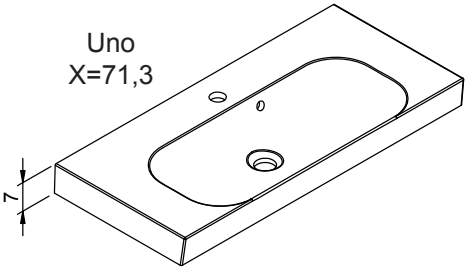


**1**

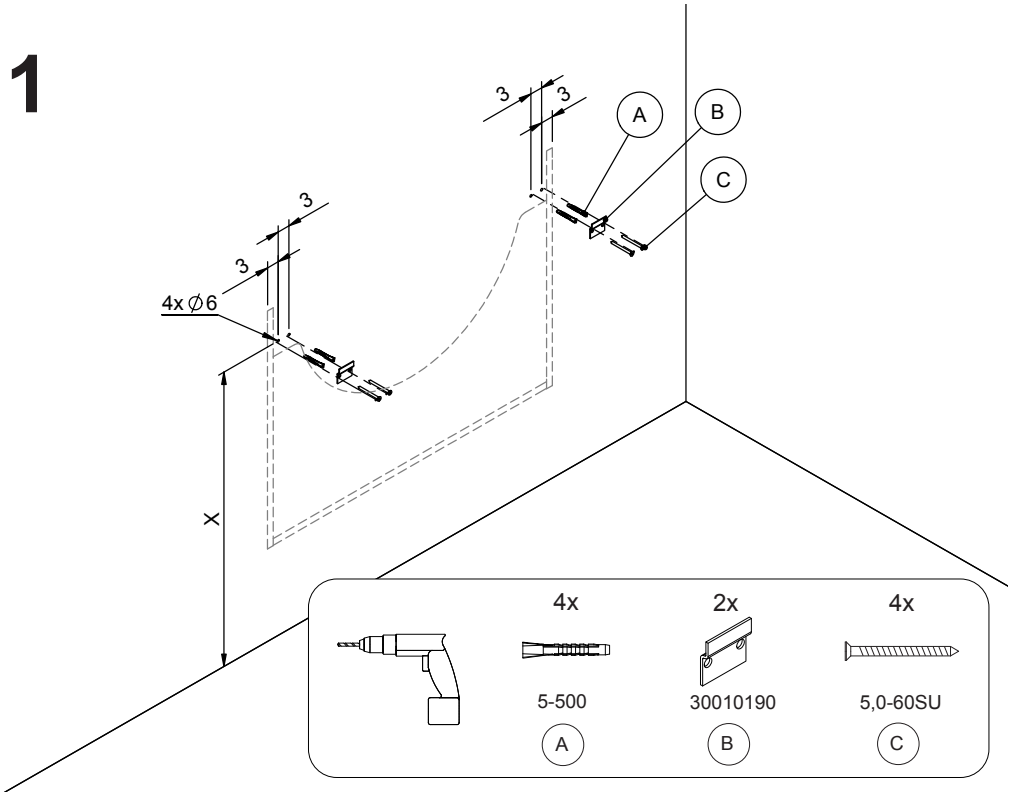

# 2

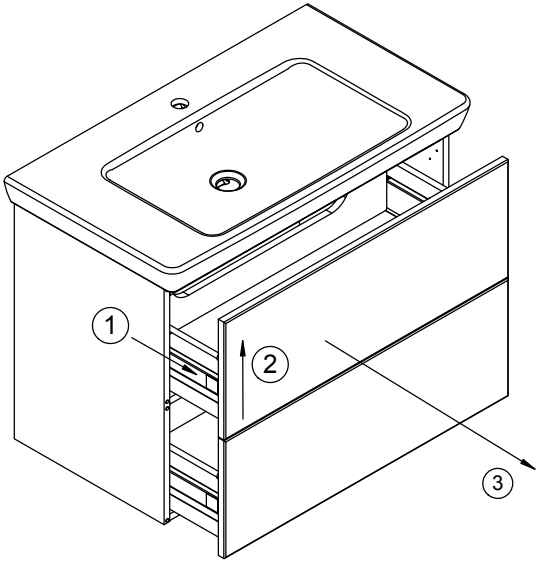


# 3

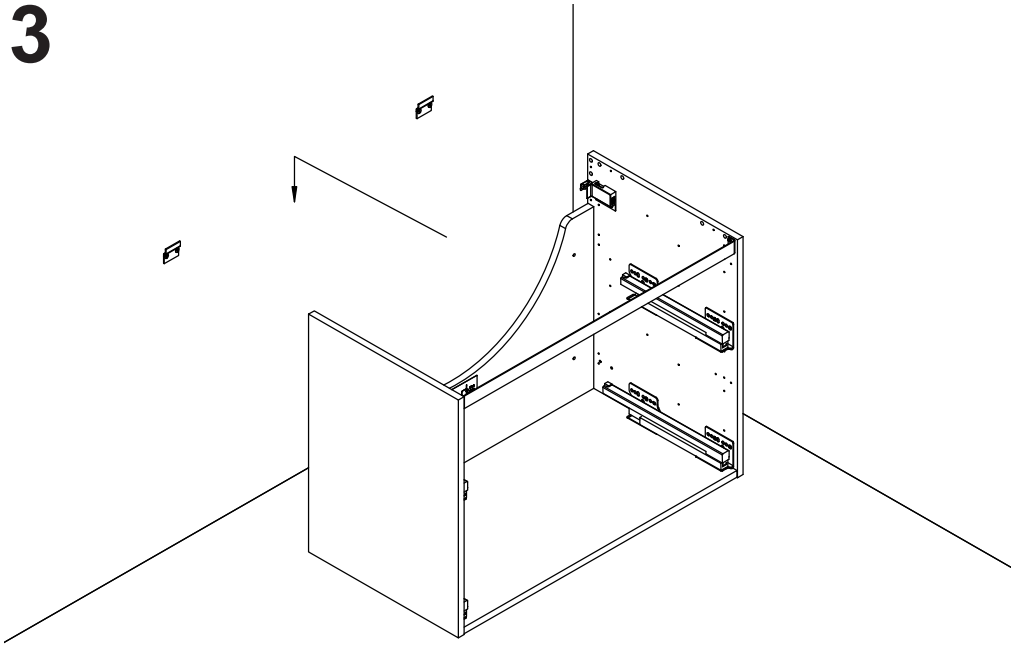

# 4

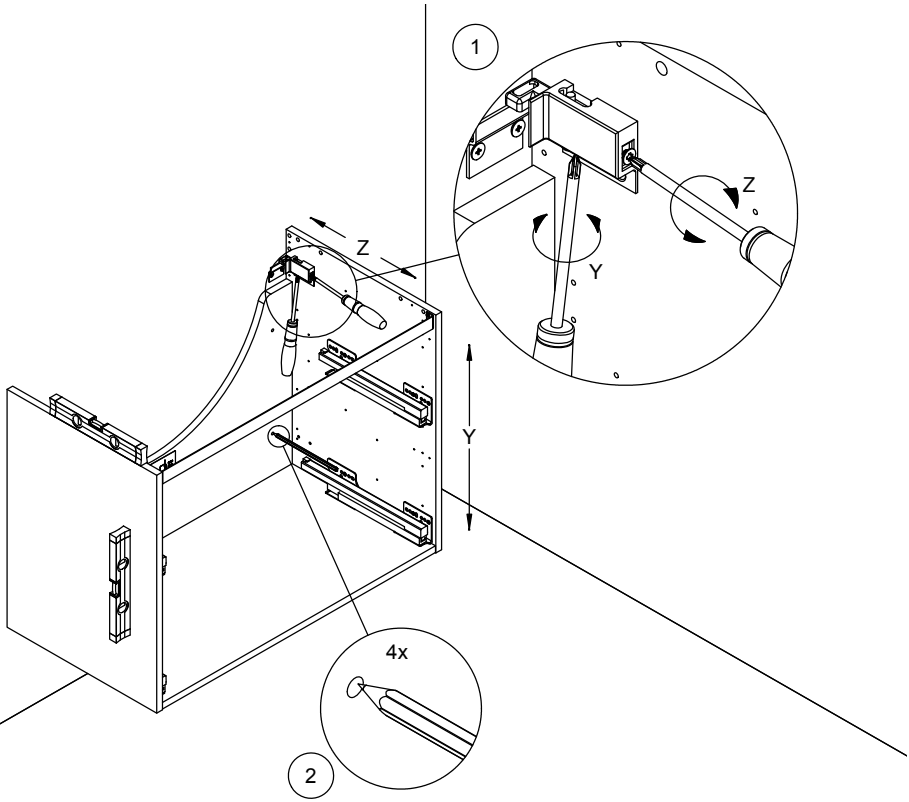


# 5

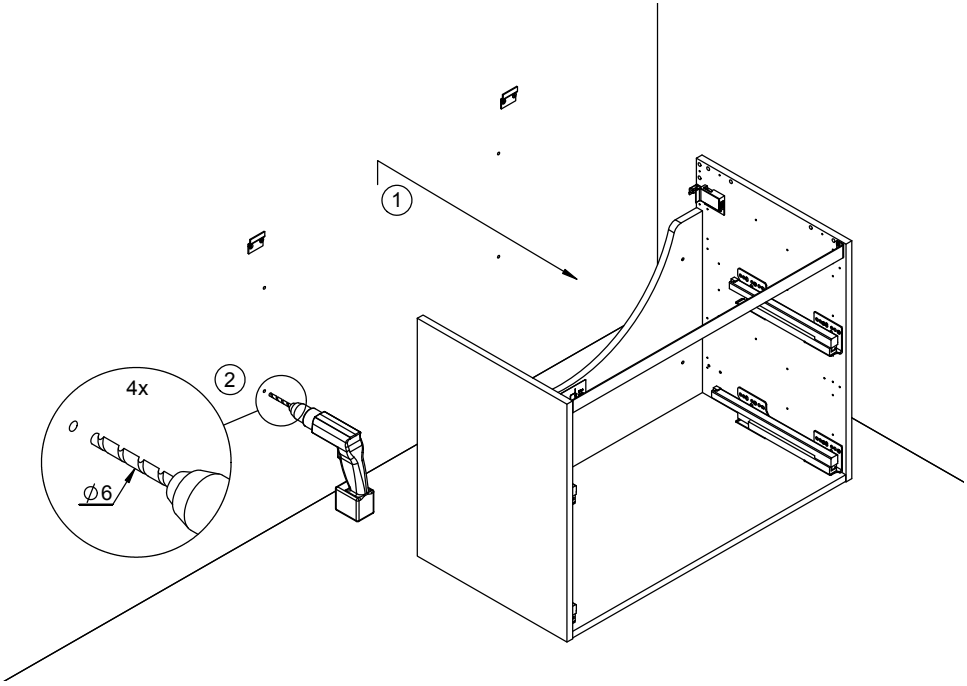

# 6

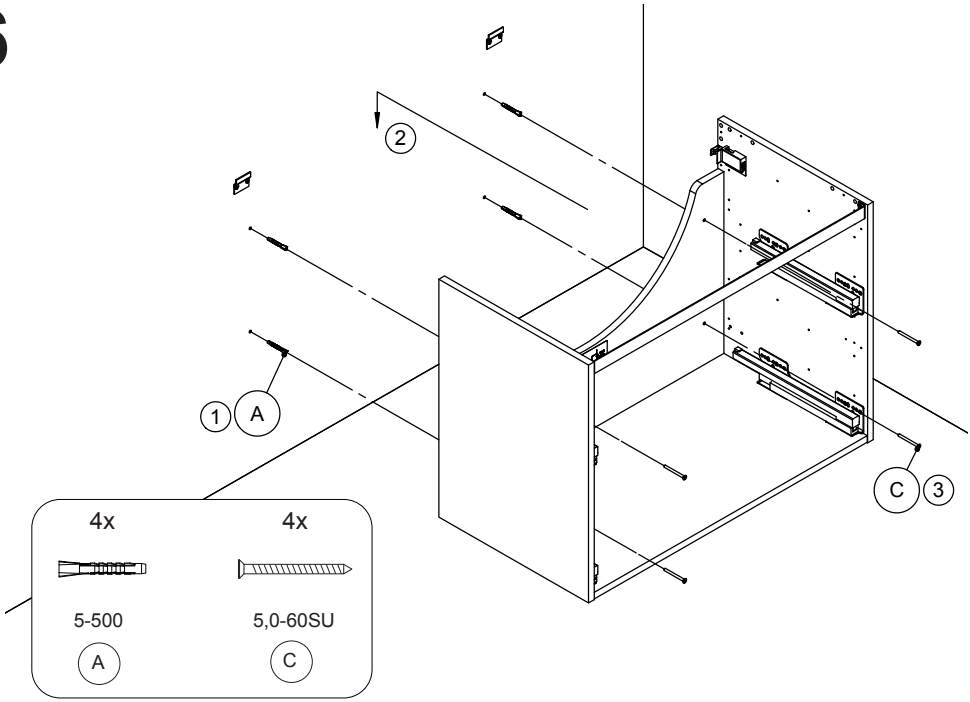


# 7

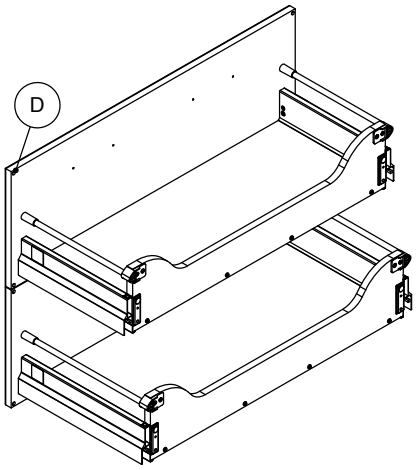


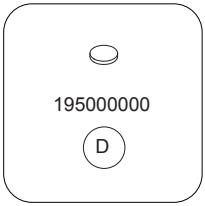

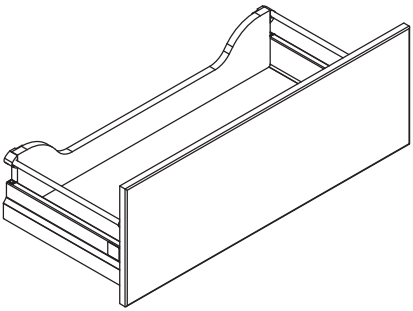

8

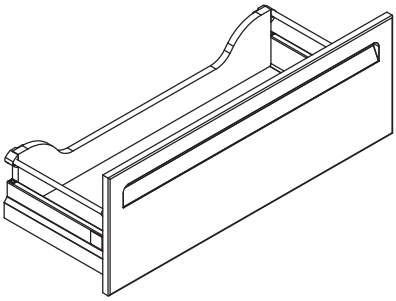

9

# 8

1

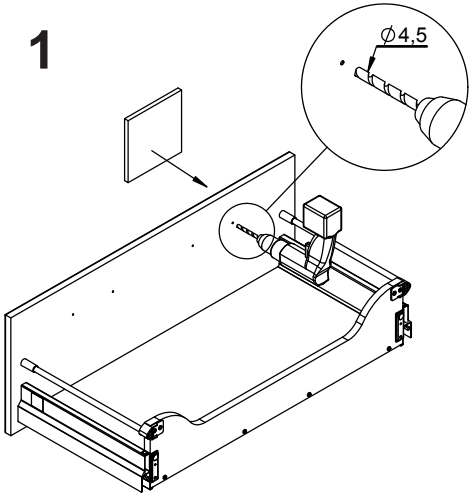


2

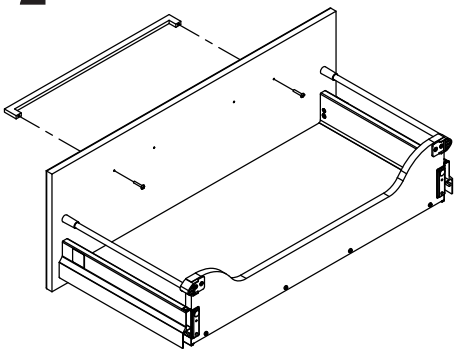

# 9

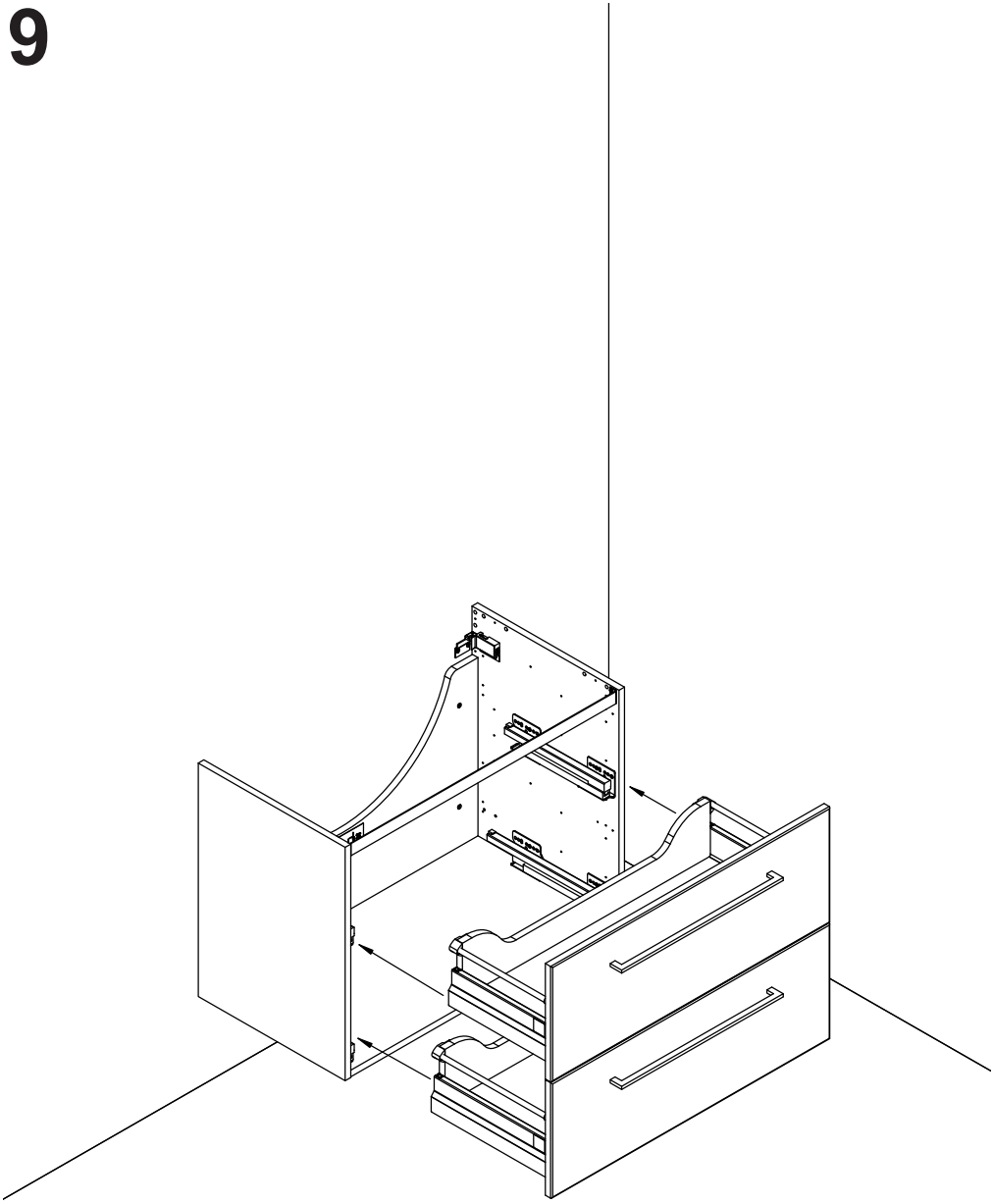

# 10

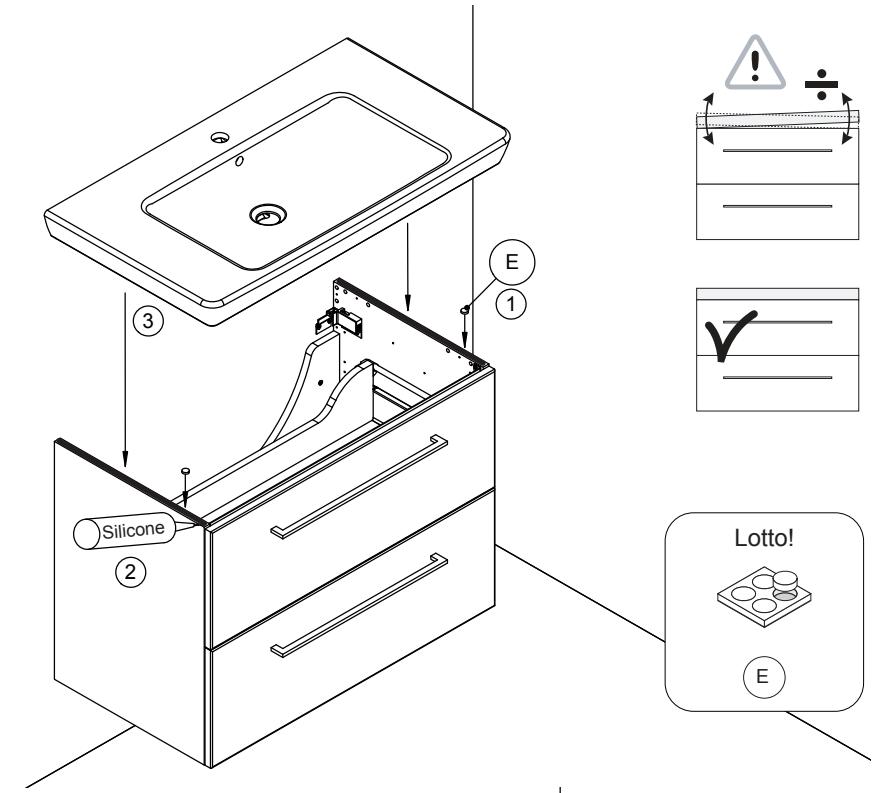


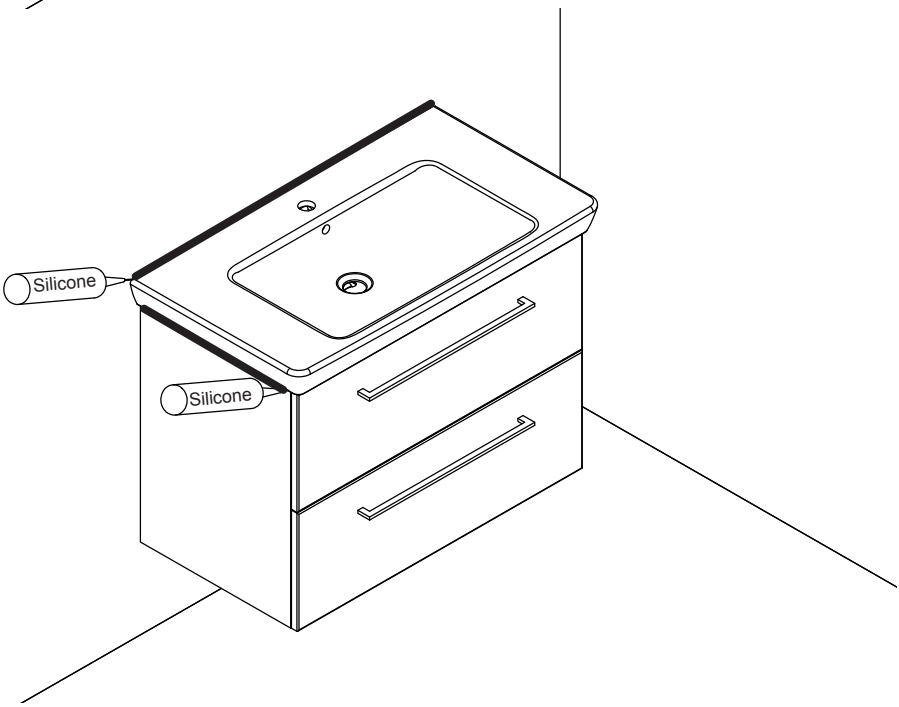

# 11

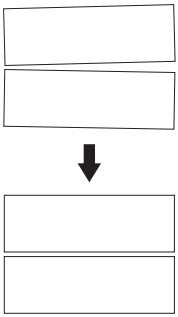

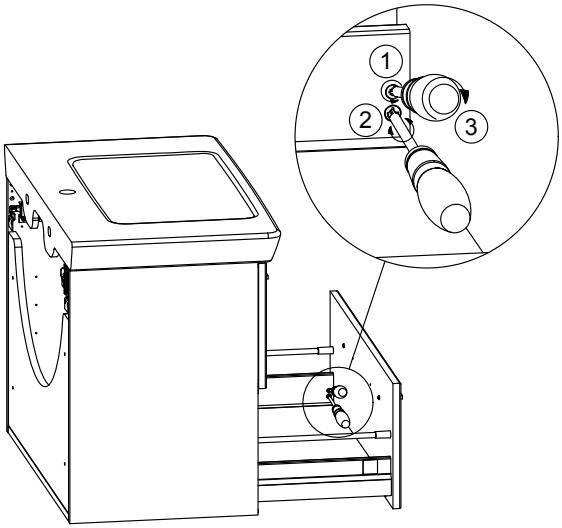


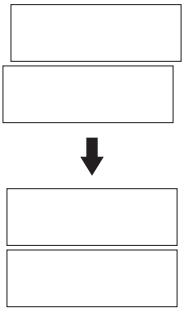

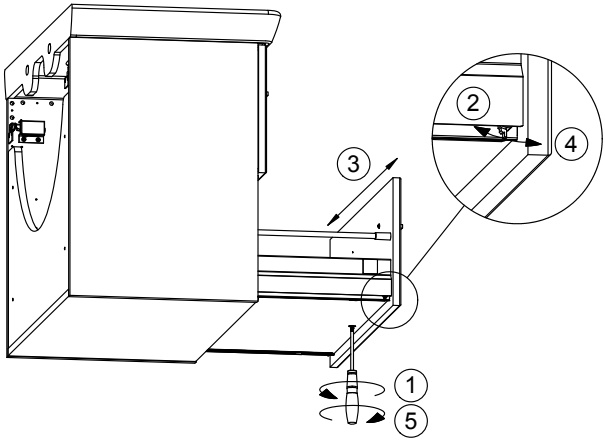


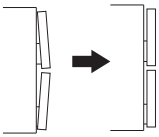

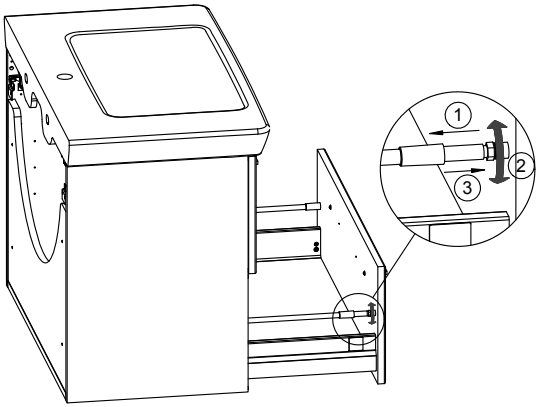

www.dansani.com www.scanbad.com

No. 827 A5 150114 Rev. 04